MX Series 5G Universal Routing Platform Interface Module Reference

Modified: 2019-07-02

Copyright © 2019, Juniper Networks, Inc.

Juniper Networks, Inc.
1133 Innovation Way
Sunnyvale, California 94089
USA
408-745-2000
www.juniper.net

Juniper Networks, the Juniper Networks logo, Juniper, and Junos are registered trademarks of Juniper Networks, Inc. in the United States and other countries. All other trademarks, service marks, registered marks, or registered service marks are the property of their respective owners.

Juniper Networks assumes no responsibility for any inaccuracies in this document. Juniper Networks reserves the right to change, modify, transfer, or otherwise revise this publication without notice.

MX Series 5G Universal Routing Platform Interface Module Reference
Copyright © 2019 Juniper Networks, Inc. All rights reserved.

The information in this document is current as of the date on the title page.

YEAR 2000 NOTICE

Juniper Networks hardware and software products are Year 2000 compliant. Junos OS has no known time-related limitations through the year 2038. However, the NTP application is known to have some difficulty in the year 2036.

END USER LICENSE AGREEMENT

The Juniper Networks product that is the subject of this technical documentation consists of (or is intended for use with) Juniper Networks software. Use of such software is subject to the terms and conditions of the End User License Agreement ("EULA") posted at https://support.juniper.net/support/eula/. By downloading, installing or using such software, you agree to the terms and conditions of that EULA.

Table of Contents

About the Documentation . . . xiii
Documentation and Release Notes . . . xiii
Using the Examples in This Manual . . . xiii
Merging a Full Example . . . xiv
Merging a Snippet . . . xiv
Documentation Conventions . . . xv
Documentation Feedback . . . xvii
Requesting Technical Support . . . xvii
Self-Help Online Tools and Resources . . . xviii
Creating a Service Request with JTAC . . . xviii

Part 1 Overview

Chapter 1 **Interface Module Overview . . . 3**
MX Series Interface Module Overview . . . 3

Chapter 2 **DPCs Supported on MX Series Routers . . . 7**
MX Series DPC Overview . . . 7
DPCs Supported on MX240, MX480, and MX960 Routers . . . 8

Chapter 3 **MPCs Supported on MX Series Routers . . . 11**
MX Series MPC Overview . . . 11
MPCs Supported by MX Series Routers . . . 12

Chapter 4 **MICs Supported on MX Series Routers . . . 17**
MX Series MIC Overview . . . 17
MICs Supported by MX Series Routers . . . 18
MIC/MPC Compatibility . . . 26

Chapter 5 **FPCs and PICs Supported on MX Series Routers . . . 35**
MX Series FPC and PIC Overview . . . 35
High Availability Features . . . 36
FPCs Supported by MX240, MX480, and MX960 Routers . . . 36
PICs Supported by MX240, MX480, and MX960 Routers . . . 37

Chapter 6 **Network Interface Specifications . . . 39**
Determining Transceiver Support and Specifications . . . 39
Cable and Connector Specifications for MX and PTX Series Devices . . . 40
12-Fiber MPO Connectors . . . 40
12-Fiber Ribbon Patch Cables with MPO Connectors . . . 40
12-Fiber Ribbon Breakout Cables with MPO-to-LC Duplex Connectors . . . 42

12-Ribbon Patch and Breakout Cables Available from Juniper Networks . . . 43
24-Fiber MPO Connectors . . . 44
LC Duplex Connectors . . . 44

Part 2 DPC, MPC, MIC, and PIC Descriptions

Chapter 7 MX Series DPC Descriptions . . . 49

Gigabit Ethernet DPC with SFP . . . 50
Gigabit Ethernet Enhanced DPC with SFP . . . 52
Gigabit Ethernet Enhanced Ethernet Services DPC with SFP . . . 54
Gigabit Ethernet Enhanced Queuing Ethernet Services DPC with SFP . . . 56
Gigabit Ethernet Enhanced Queuing IP Services DPCs with SFP . . . 58
10-Gigabit Ethernet DPC with XFP . . . 61
10-Gigabit Ethernet Enhanced DPCs with XFP . . . 63
10-Gigabit Ethernet Enhanced Ethernet Services DPC with XFP . . . 65
10-Gigabit Ethernet Enhanced Queuing Ethernet Services DPC with XFP . . . 67
10-Gigabit Ethernet Enhanced Queuing IP Services DPC with XFP . . . 69
Multi-Rate Ethernet Enhanced DPC with SFP and XFP . . . 71
Multi-Rate Ethernet Enhanced Ethernet Services DPC with SFP and XFP . . . 73
Multi-Rate Ethernet Enhanced Queuing IP Services DPC with SFP and XFP . . . 75
Multiservices DPC . . . 77
Tri-Rate Enhanced DPC . . . 79
Tri-Rate Enhanced Ethernet Services DPC . . . 81

Chapter 8 MX Series MPC Descriptions . . . 83

16x10GE MPC . . . 84
Multiservices MPC . . . 86
MPC1 . . . 88
MPC1E . . . 89
MPC1 Q . . . 91
MPC1E Q . . . 93
MPC2 . . . 95
MPC2E . . . 97
MPC2 Q . . . 99
MPC2E Q . . . 101
MPC2 EQ . . . 103
MPC2E EQ . . . 105
MPC2E P . . . 107
MPC2E NG . . . 109
MPC2E NG Q . . . 111
MPC3E . . . 113
MPC3E NG . . . 115
MPC3E NG Q . . . 117
32x10GE MPC4E . . . 119
2x100GE + 8x10GE MPC4E . . . 120
6x40GE + 24x10GE MPC5E . . . 122
6x40GE + 24x10GE MPC5EQ . . . 124
2x100GE + 4x10GE MPC5E . . . 126
2x100GE + 4x10GE MPC5EQ . . . 127

 Copyright © 2019, Juniper Networks, Inc.

MPC6E . . . 129
MPC7E (Multi-Rate) . . . 130
MPC7E 10G . . . 132
MPC8E . . . 134
MPC9E . . . 135
MPC10E-15C-MRATE . . . 137
MX10003 MPC (Multi-Rate) . . . 139
Line card (MX10K-LC2101) . . . 140

Chapter 9 **MX Series MIC Descriptions . . . 143**

ATM MIC with SFP . . . 144
DS3/E3 MIC . . . 147
Gigabit Ethernet MIC with SFP . . . 151
Port Numbering . . . 152
Gigabit Ethernet MIC with SFP (E) . . . 154
Gigabit Ethernet MIC with SFP (EH) . . . 158
10-Gigabit Ethernet MICs with XFP . . . 159
10-Gigabit Ethernet MIC with SFP+ (10 Ports) . . . 162
10-Gigabit Ethernet MIC with SFP+ (24 Ports) . . . 164
10-Gigabit Ethernet OTN MIC with SFP+ (24 Ports) . . . 165
40-Gigabit Ethernet MIC with QSFP+ . . . 167
100-Gigabit Ethernet MIC with CFP . . . 168
100-Gigabit Ethernet MIC with CXP . . . 170
100-Gigabit Ethernet MIC with CXP (4 Ports) . . . 171
100-Gigabit Ethernet MIC with CFP2 . . . 172
100-Gigabit DWDM OTN MIC with CFP2-ACO . . . 174
Channelized SONET/SDH OC3/STM1 (Multi-Rate) MICs with SFP . . . 183
Channelized OC3/STM1 (Multi-Rate) Circuit Emulation MIC with SFP . . . 188
Channelized OC3/STM1 (Multi-Rate) Circuit Emulation MIC with SFP (H) . . . 190
Channelized E1/T1 Circuit Emulation MIC . . . 193
Channelized E1/T1 Circuit Emulation MIC (H) . . . 196
Tri-Rate MIC . . . 199
MIC MRATE . . . 203
Multiservices MIC . . . 205
SONET/SDH OC3/STM1 (Multi-Rate) MICs with SFP . . . 206
Multi-Rate Ethernet MIC . . . 210
Multi-Rate Ethernet MACSEC MIC . . . 213
SONET/SDH OC192/STM64 MIC with XFP . . . 215

Chapter 10 **MX Series PIC Descriptions . . . 219**

Channelized OC12/STM4 Enhanced IQ (IQE) PIC with SFP . . . 219
Channelized OC48/STM16 Enhanced IQ (IQE) PIC with SFP . . . 220
SONET/SDH OC3/STM1 (Multi-Rate) PIC with SFP . . . 226
SONET/SDH OC12/STM4 (Multi-Rate) PIC with SFP . . . 229
SONET/SDH OC48/STM16 Enhanced IQ (IQE) PIC with SFP . . . 232
SONET/SDH OC48/STM16 (Multi-Rate) PIC with SFP . . . 236
SONET/SDH OC48/STM16 PIC with SFP . . . 239
SONET/SDH OC192c/STM64 PIC . . . 242
SONET/SDH OC192c/STM64 PIC with XFP . . . 245

Copyright © 2019, Juniper Networks, Inc.

Part 3 Protocol and Application Support

Chapter 11 DPC Protocol and Application Support for MX240, MX480, and MX960 251

Protocols and Applications Supported by DPCs and Enhanced DPCs (DPC and DPCE-R) 251
Protocols and Applications Supported by Enhanced Ethernet Services DPCs (DPCE-X) 257
Protocols and Applications Supported by Enhanced Queuing IP Services DPCs (DPCE-R-Q) 261
Protocols and Applications Supported by Enhanced Queuing Ethernet Services DPCs (DPCE-X-Q) 266
Protocols and Applications Supported by the Multiservices DPC (MS-DPC) . . . 271

Chapter 12 MPC Protocol and Application Support for MX240, MX480, MX960, MX2010, MX2020, and MX10003 273

Protocols and Applications Supported on MPCs for MX Series Routers 273
Protocols and Applications Supported on the MPC1E for MX Series Routers . . . 282
Protocols and Applications Supported by the MX240, MX480, MX960, MX2010, and MX2020 MPC2E 288
Protocols and Applications Supported by the MPC3E on MX Series Routers . . . 296
Protocols and Applications Supported on the MPC4E for MX Series Routers . . 303
Protocols and Applications Supported by the MPC5E for MX Series Routers . . . 311
Protocols and Applications Supported by the MPC6E for MX2000 Routers 317
Protocols and Applications Supported by the MPC7E for MX Series Routers . . . 324
Protocols and Applications Supported by the MPC8E and MPC9E on the MX2010 and MX2020 Routers 333
Protocols and Applications Supported by the MS-MIC and MS-MPC 340
Protocols and Applications Supported by the MX10003 MPC (Multi-Rate) on the MX10003 Router 342
Protocols and Applications Supported by the JNP10K-LC2101 on the MX10008 Routers 348
Protocols and Applications Supported by the MPC10E 356

 Copyright © 2019, Juniper Networks, Inc.

List of Figures

Part 1 Overview

Chapter 6 Network Interface Specifications 39

Figure 1: 24-Fiber MPO Optical Lane Assignments 44
Figure 2: LC Duplex Connector 45

Part 2 DPC, MPC, MIC, and PIC Descriptions

Chapter 7 MX Series DPC Descriptions 49

Figure 3: 20-Port Gigabit Ethernet Enhanced Queuing IP Services DPC with SFP 58
Figure 4: 40-Port Gigabit Ethernet Enhanced Queuing IP Services DPC with SFP 58
Figure 5: 2-Port 10-Gigabit Ethernet Enhanced DPC with XFP 63
Figure 6: 4-Port 10-Gigabit Ethernet Enhanced DPC with XFP 63

Chapter 8 MX Series MPC Descriptions 83

Figure 7: Multiservices MPC 86

Chapter 9 MX Series MIC Descriptions 143

Figure 8: 8-Port ATM MIC with SFP 144
Figure 9: DS3/E3 MIC 147
Figure 10: 20-Port Gigabit Ethernet MIC with SFP 151
Figure 11: Port Numbering for the Gigabit Ethernet MIC with SFP (MX960) 152
Figure 12: Port Numbering for the Gigabit Ethernet MIC with SFP (MX480) 153
Figure 13: Port Numbering for Gigabit Ethernet MIC with SFP (MX240) 153
Figure 14: 20-Port Gigabit Ethernet MIC with SFP (E) 154
Figure 15: Port Numbering for the MIC-3D-20GE-SFP-E (MX960) 156
Figure 16: Port Numbering for the MIC-3D-20GE-SFP-E (MX480) 157
Figure 17: Port Numbering for the MIC-3D-20GE-SFP-E (MX240) 157
Figure 18: 20-Port Gigabit Ethernet MIC with SFP (EH) 158
Figure 19: 2-Port 10-Gigabit Ethernet MIC with XFP 159
Figure 20: 4-Port 10-Gigabit Ethernet MIC with XFP 160
Figure 21: Port Numbering for 2-Port 10-Gigabit Ethernet MIC with XFP 161
Figure 22: Port Numbering for 4-Port 10-Gigabit Ethernet MIC with XFP 162
Figure 23: 10-Gigabit Ethernet MIC with SFP+ 162
Figure 24: 40-Gigabit Ethernet MIC with QSFP+ 167
Figure 25: 1-Port 100 Gigabit Ethernet MIC with CFP 168
Figure 26: 100-Gigabit Ethernet MIC with CXP 170
Figure 27: 4-Port Channelized SONET/SDH OC3/STM1 (Multi-Rate) MIC with SFP 183

Figure 28: 8-Port Channelized SONET/SDH OC3/STM1 (Multi-Rate) MIC with SFP . . . 184
Figure 29: Channelized OC3/STM1 (Multi-Rate) Circuit Emulation MIC with SFP . . . 188
Figure 30: Channelized OC3/STM1 (Multi-Rate) Circuit Emulation MIC with SFP (H) . . . 190
Figure 31: Channelized E1/T1 Circuit Emulation MIC . . . 193
Figure 32: Channelized E1/T1 Circuit Emulation MIC (H) . . . 196
Figure 33: 40-Port Tri-Rate MIC . . . 199
Figure 34: Port Numbering for the Tri-Rate MIC (MX960) . . . 201
Figure 35: Port Numbering for the Tri-Rate MIC (MX480) . . . 202
Figure 36: Port Numbering for the Tri-Rate MIC (MX240) . . . 202
Figure 37: 12-Port Multi-Rate MIC with QSFP+ . . . 203
Figure 38: MS-MIC-16G . . . 205
Figure 39: 4-Port SONET/SDH OC3/STM1 (Multi-Rate) MIC with SFP . . . 206
Figure 40: 8-Port SONET/SDH OC3/STM1 (Multi-Rate) MIC with SFP . . . 207
Figure 41: JNP-MIC . . . 210
Figure 42: JNP-MIC1-MACSEC . . . 210
Figure 43: MIC-MACSEC-MRATE . . . 210
Figure 44: MIC-MACSEC-MRATE . . . 213
Figure 45: SONET/SDH OC192/STM64 MIC with XFP . . . 215

Copyright © 2019, Juniper Networks, Inc.

List of Tables

About the Documentation xiii

Table 1: Notice Icons xv
Table 2: Text and Syntax Conventions xvi

Part 1 Overview

Chapter 2 DPCs Supported on MX Series Routers 7

Table 3: DPCs Supported in MX240, MX480, and MX960 Routers 8

Chapter 3 MPCs Supported on MX Series Routers 11

Table 4: MPCs Supported by MX240, MX480, MX960, MX2008, MX2010, MX2020, and MX10003 Routers 12

Chapter 4 MICs Supported on MX Series Routers 17

Table 5: MICs Supported by MX240, MX480, MX960 and MX2008 Routers 18
Table 6: MICs Supported by MX2010 and MX2020 Routers 20
Table 7: MICs Supported by MX5, MX10, and MX40 Routers 22
Table 8: MICs Supported by MX80 and MX104 Routers 24
Table 9: MICs Supported by MX10003 Router 26
Table 10: MIC/MPC1 Compatibility 26
Table 11: MIC/MPC2 Compatibility 28
Table 12: MIC/MPC3 Compatibility 30
Table 13: MIC/MPC6 Compatibility 33
Table 14: MIC/MPC8 Compatibility 33
Table 15: MIC/MPC9 Compatibility 33
Table 16: MIC/MPC10003 Compatibility 33

Chapter 5 FPCs and PICs Supported on MX Series Routers 35

Table 17: FPCs Supported by MX Series Routers 36
Table 18: PICs Supported by MX240, MX480, and MX960 Routers 37

Chapter 6 Network Interface Specifications 39

Table 19: Cable Signals for 12-Fiber Ribbon Patch Cables 41
Table 20: Cable Pinouts for 12-Fiber Ribbon Patch Cables 41
Table 21: Cable Pinouts for 12-Fiber Ribbon Breakout Cables 42
Table 22: 12-Ribbon Patch and Breakout Cables Available from Juniper Networks 43

Part 2 DPC, MPC, MIC, and PIC Descriptions

Chapter 8 MX Series MPC Descriptions 83

Table 23: MX10003 MPC (Multi-Rate) Port Speed 140

Chapter 9 MX Series MIC Descriptions 143

Table 24: OTN Alarms and Defects 181
Table 25: MIC MRATE Gigabit Ethernet Port Speed Capabilities 204
Table 26: Multi Rate Ethernet MIC Port Speed Capabilities for JNP-MIC1 and JNP-MIC1-MACSEC 212
Table 27: Multi Rate Ethernet MIC Port Speed Capabilities for MIC-MACSEC-MRATE 212
Table 28: Multi Rate Ethernet MIC Port Speed Capabilities for MIC-MACSEC-MRATE 214

Part 3 Protocol and Application Support

Chapter 11 DPC Protocol and Application Support for MX240, MX480, and MX960 251

Table 29: Protocols and Applications Supported by the DPCs and Enhanced DPCs (DPC and DPCE-R) 251
Table 30: Protocols and Applications Supported by the Enhanced Ethernet Services DPCs (DPCE-X) 257
Table 31: Protocols and Applications Supported by the Enhanced Queuing IP Services DPCs (DPCE-R-Q) 262
Table 32: Protocols and Applications Supported by the Enhanced Queuing Ethernet Services DPCs (DPCE-X-Q) 266
Table 33: Protocols and Applications Supported by the Multiservices DPC (MS-DPC) 271

Chapter 12 MPC Protocol and Application Support for MX240, MX480, MX960, MX2010, MX2020, and MX10003 273

Table 34: Protocols and Applications Supported by the MX240, MX480, MX960, MX2010, and MX2020 MPCs 274
Table 35: Protocols and Applications Supported by the MX240, MX480, MX960, MX2010, and MX2020 Enhanced MPCs (MPC1Es) 283
Table 36: Protocols and Applications Supported by the MX240, MX480, MX960, MX2010, and MX2020 MPC2E 289
Table 37: Protocols and Applications Supported by MPC3E Cards for MX Series Routers 296
Table 38: Protocols and Applications Supported by the MX Series MPC4E 303
Table 39: Protocols and Applications Supported by the MX240, MX480, MX960, MX2010, and MX2020 MPC5E 311
Table 40: Protocols and Applications Supported by the MX2010 and MX2020 MPC6E 318
Table 41: Protocols and Applications Supported by MPC7Es in the MX240, MX480, MX960, MX2010, and MX2020 Routers 324
Table 42: Protocols and Applications Supported by MPC8E and MPC9E on the MX2010 and MX2020 Routers 333
Table 43: Protocols and Applications Supported by the MS-MIC and MS-MPC 340
Table 44: Protocols and Applications Supported by MX10003MPC on the MX10003 Router 342

 Copyright © 2019, Juniper Networks, Inc.

Table 45: Protocols and Applications Supported by JNP10K-LC2101 on the MX10008 Routers 348
Table 46: Protocols and Applications Supported by MPC10E line cards in the MX240, MX480, and MX960 Routers 356

Copyright © 2019, Juniper Networks, Inc.

About the Documentation

- Documentation and Release Notes on page xiii
- Using the Examples in This Manual on page xiii
- Documentation Conventions on page xv
- Documentation Feedback on page xvii
- Requesting Technical Support on page xvii

Documentation and Release Notes

To obtain the most current version of all Juniper Networks® technical documentation, see the product documentation page on the Juniper Networks website at https://www.juniper.net/documentation/.

If the information in the latest release notes differs from the information in the documentation, follow the product Release Notes.

Juniper Networks Books publishes books by Juniper Networks engineers and subject matter experts. These books go beyond the technical documentation to explore the nuances of network architecture, deployment, and administration. The current list can be viewed at https://www.juniper.net/books.

Using the Examples in This Manual

If you want to use the examples in this manual, you can use the **load merge** or the **load merge relative** command. These commands cause the software to merge the incoming configuration into the current candidate configuration. The example does not become active until you commit the candidate configuration.

If the example configuration contains the top level of the hierarchy (or multiple hierarchies), the example is a *full example*. In this case, use the **load merge** command.

If the example configuration does not start at the top level of the hierarchy, the example is a *snippet*. In this case, use the **load merge relative** command. These procedures are described in the following sections.

Merging a Full Example

To merge a full example, follow these steps:

1. From the HTML or PDF version of the manual, copy a configuration example into a text file, save the file with a name, and copy the file to a directory on your routing platform.

   For example, copy the following configuration to a file and name the file **ex-script.conf**. Copy the **ex-script.conf** file to the **/var/tmp** directory on your routing platform.

   ```
   system {
     scripts {
       commit {
         file ex-script.xsl;
       }
     }
   }
   interfaces {
     fxp0 {
       disable;
       unit 0 {
         family inet {
           address 10.0.0.1/24;
         }
       }
     }
   }
   ```

2. Merge the contents of the file into your routing platform configuration by issuing the **load merge** configuration mode command:

   ```
   [edit]
   user@host# load merge /var/tmp/ex-script.conf
   load complete
   ```

Merging a Snippet

To merge a snippet, follow these steps:

1. From the HTML or PDF version of the manual, copy a configuration snippet into a text file, save the file with a name, and copy the file to a directory on your routing platform.

   For example, copy the following snippet to a file and name the file **ex-script-snippet.conf**. Copy the **ex-script-snippet.conf** file to the **/var/tmp** directory on your routing platform.

   ```
   commit {
     file ex-script-snippet.xsl; }
   ```


Copyright © 2019, Juniper Networks, Inc.

2. Move to the hierarchy level that is relevant for this snippet by issuing the following configuration mode command:

```
[edit]
user@host# edit system scripts
[edit system scripts]
```

3. Merge the contents of the file into your routing platform configuration by issuing the **load merge relative** configuration mode command:

```
[edit system scripts]
user@host# load merge relative /var/tmp/ex-script-snippet.conf
load complete
```

For more information about the **load** command, see CLI Explorer.

Documentation Conventions

Table 1 on page xv defines notice icons used in this guide.

Table 1: Notice Icons

Icon	Meaning	Description
	Informational note	Indicates important features or instructions.
	Caution	Indicates a situation that might result in loss of data or hardware damage.
	Warning	Alerts you to the risk of personal injury or death.
	Laser warning	Alerts you to the risk of personal injury from a laser.
	Tip	Indicates helpful information.
	Best practice	Alerts you to a recommended use or implementation.

Table 2 on page xvi defines the text and syntax conventions used in this guide.

Table 2: Text and Syntax Conventions

Convention	Description	Examples
Bold text like this	Represents text that you type.	To enter configuration mode, type the **configure** command: user@host> **configure**
`Fixed-width text like this`	Represents output that appears on the terminal screen.	`user@host>` **show chassis alarms** `No alarms currently active`
Italic text like this	• Introduces or emphasizes important new terms. • Identifies guide names. • Identifies RFC and Internet draft titles.	• A policy *term* is a named structure that defines match conditions and actions. • *Junos OS CLI User Guide* • RFC 1997, *BGP Communities Attribute*
Italic text like this	Represents variables (options for which you substitute a value) in commands or configuration statements.	Configure the machine's domain name: [edit] root@# **set system domain-name** *domain-name*
Text like this	Represents names of configuration statements, commands, files, and directories; configuration hierarchy levels; or labels on routing platform components.	• To configure a stub area, include the **stub** statement at the **[edit protocols ospf area area-id]** hierarchy level. • The console port is labeled **CONSOLE**.
< > (angle brackets)	Encloses optional keywords or variables.	**stub <default-metric *metric*>;**
| (pipe symbol)	Indicates a choice between the mutually exclusive keywords or variables on either side of the symbol. The set of choices is often enclosed in parentheses for clarity.	**broadcast | multicast** (***string1* | *string2* | *string3***)
# (pound sign)	Indicates a comment specified on the same line as the configuration statement to which it applies.	**rsvp { # Required for dynamic MPLS only**
[ ] (square brackets)	Encloses a variable for which you can substitute one or more values.	**community name members [*community-ids*]**

Indention and braces ({ })	Identifies a level in the configuration hierarchy.	[edit]
		routing-options {
		static {
		route default {
		nexthop *address*;
		retain;
		}
		}
		}

; (semicolon)	Identifies a leaf statement at a configuration hierarchy level.	

GUI Conventions

Copyright © 2019, Juniper Networks, Inc.

Table 2: Text and Syntax Conventions (continued)

Convention	Description	Examples
Bold text like this	Represents graphical user interface (GUI) items you click or select.	• In the Logical Interfaces box, select **All Interfaces**. • To cancel the configuration, click **Cancel**.
> (bold right angle bracket)	Separates levels in a hierarchy of menu selections.	In the configuration editor hierarchy, select **Protocols>Ospf**.

Documentation Feedback

We encourage you to provide feedback so that we can improve our documentation. You can use either of the following methods:

- Online feedback system—Click TechLibrary Feedback, on the lower right of any page on the Juniper Networks TechLibrary site, and do one of the following:

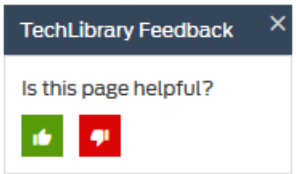

  - Click the thumbs-up icon if the information on the page was helpful to you.
  - Click the thumbs-down icon if the information on the page was not helpful to you or if you have suggestions for improvement, and use the pop-up form to provide feedback.

- E-mail—Send your comments to **techpubs-comments@juniper.net**. Include the document or topic name, URL or page number, and software version (if applicable).

Requesting Technical Support

Technical product support is available through the Juniper Networks Technical Assistance Center (JTAC). If you are a customer with an active Juniper Care or Partner Support Services support contract, or are covered under warranty, and need post-sales technical support, you can access our tools and resources online or open a case with JTAC.

- JTAC policies—For a complete understanding of our JTAC procedures and policies, review the *JTAC User Guide* located at https://www.juniper.net/us/en/local/pdf/resource-guides/7100059-en.pdf.
- Product warranties—For product warranty information, visit https://www.juniper.net/support/warranty/.
- JTAC hours of operation—The JTAC centers have resources available 24 hours a day, 7 days a week, 365 days a year.

Self-Help Online Tools and Resources

For quick and easy problem resolution, Juniper Networks has designed an online self-service portal called the Customer Support Center (CSC) that provides you with the following features:

- Find CSC offerings: https://www.juniper.net/customers/support/
- Search for known bugs: https://prsearch.juniper.net/
- Find product documentation: https://www.juniper.net/documentation/
- Find solutions and answer questions using our Knowledge Base: https://kb.juniper.net/
- Download the latest versions of software and review release notes: https://www.juniper.net/customers/csc/software/
- Search technical bulletins for relevant hardware and software notifications: https://kb.juniper.net/InfoCenter/
- Join and participate in the Juniper Networks Community Forum: https://www.juniper.net/company/communities/
- Create a service request online: https://myjuniper.juniper.net

To verify service entitlement by product serial number, use our Serial Number Entitlement (SNE) Tool: https://entitlementsearch.juniper.net/entitlementsearch/

Creating a Service Request with JTAC

You can create a service request with JTAC on the Web or by telephone.

- Visit https://myjuniper.juniper.net.
- Call 1-888-314-JTAC (1-888-314-5822 toll-free in the USA, Canada, and Mexico).

For international or direct-dial options in countries without toll-free numbers, see https://support.juniper.net/support/requesting-support/.

Copyright © 2019, Juniper Networks, Inc.

PART 1

Overview

- Interface Module Overview on page 3
- DPCs Supported on MX Series Routers on page 7
- MPCs Supported on MX Series Routers on page 11
- MICs Supported on MX Series Routers on page 17
- FPCs and PICs Supported on MX Series Routers on page 35
- Network Interface Specifications on page 39

Copyright © 2019, Juniper Networks, Inc.

Copyright © 2019, Juniper Networks, Inc.

CHAPTER 1

Interface Module Overview

- MX Series Interface Module Overview on page 3

MX Series Interface Module Overview

Juniper Networks MX Series 5G Universal Routing Platforms process incoming and outgoing packets on several different types of interface modules (also known as line cards), including Dense Port Concentrators (DPCs), Flexible Port Concentrators (FPCs) with associated Physical Interface Cards (PICs), Trio Modular Port Concentrators (MPCs) with associated Modular Interface Cards (MICs). FPCs are populated with PICs for various interface types. DPCs and MPCs combine the functions of FPCs and the PICs, and with associated physical interfaces support a variety of interface types. The configuration syntax for each type of line card is the same: ***type-fpc/pic/port***.

Switch Control Boards (MX-SCBs, MX-SCBEs, MX-SCBE2s, and SCB3s) provide full line-rate performance and redundancy without a loss of bandwidth for all MX series routers. Switch Fabric Boards (SFBs) provide increased fabric bandwidth per slot for MX2000 routers. Routing Engines (REs) and Control Boards with Routing Engines (CB-REs) provide the software processes that run Junos OS.

- Dense Port Concentrators (DPCs)—A DPC provides multiple physical interfaces and Packet Forwarding Engines on a single board that installs into a slot within the MX240, MX480, and MX960 routers. See the following topics for more information about DPCs:
  - MX Series DPC Overview on page 7
  - DPCs Supported on MX240, MX480, and MX960 Routers on page 8
- Modular Port Concentrators (MPCs) provide packet forwarding services. The MPCs are inserted into a slot in an MX240, MX480, MX960, MX2008, MX2010, and MX2020 router. MPCs for MX5, MX10, MX40, MX80, and MX104 routers install directly into the router chassis. Modular Interface Cards (MICs) provide the physical interfaces and install into the MPCs. You can install up to two MICs of different media types in the same MPC as long as the MPC supports those MICs. See the following topics for information about MPCs:
  - MX Series MPC Overview on page 11
  - MPCs Supported by MX Series Routers on page 12
  - MIC/MPC Compatibility on page 26

Copyright © 2019, Juniper Networks, Inc.

- Protocols and Applications Supported on MPCs for MX Series Routers on page 273
- Protocols and Applications Supported by the MPC3E on MX Series Routers on page 296
- Protocols and Applications Supported on the MPC4E for MX Series Routers on page 303
- Protocols and Applications Supported by the MPC5E for MX Series Routers on page 311
- Protocols and Applications Supported by the MPC6E for MX2000 Routers on page 317
- Protocols and Applications Supported by the MPC7E for MX Series Routers on page 324
- Protocols and Applications Supported by the MPC8E and MPC9E on the MX2010 and MX2020 Routers on page 333
- Protocols and Applications Supported by the MS-MIC and MS-MPC on page 340
- Protocols and Applications Supported by the MX10003 MPC (Multi-Rate) on the MX10003 Router on page 342

- Modular Interface Cards (MICs) provide physical interfaces for the router. MICs install into Modular Port Concentrators (MPCs) which provide packet forwarding services. MICs and MPCs function similarly to PICs and FPCs. MPCs install vertically in the MX2020, MX2010, MX2008, and MX960 router chassis, and horizontally in the MX480 and MX240 router chassis. On MX5, MX10, MX40, MX80, and MX104 routers, MICs install directly into the router chassis. There are also fixed-configuration MPCs, with built-in network ports or services functionality, that do not accept MICs. The maximum number of supported MPCs varies per router and hardware configuration. See the following topics for information about MICs:

  - MX Series MIC Overview on page 17
  - MICs Supported by MX Series Routers on page 18
  - MIC/MPC Compatibility on page 26

- Flexible PIC Concentrators (FPCs) and Physical Interface Cards (PICs) function similarly to MICs and MPCs. PICs provide physical interfaces for the router, and install into FPCs, which provide packet forwarding services. FPCs are installed into a slot in an MX240, MX480, and MX960 router. See the following topics for information about PICs and FPCs:

  - MX Series FPC and PIC Overview on page 35
  - High Availability Features on page 36
  - FPCs Supported by MX240, MX480, and MX960 Routers on page 36
  - PICs Supported by MX240, MX480, and MX960 Routers on page 37

- Switch Fabric Boards (SFBs) provide increased fabric bandwidth per slot. The MX2000 line of routers can support eight Switch Fabric Boards (SFB) and eight Enhanced Switch Fabric Boards (SFB2) but not both at the same time. The SFB is supported on MX2010 and MX2020 routers. See the following topics for information about SFBs:

  - *MX2000 Switch Fabric Board (SFB)*

 Copyright © 2019, Juniper Networks, Inc.

  - *MX2000 Enhanced Switch Fabric Board (SFB2)*

- Switch Control Boards (SCBs) control power to MPCs, monitor and control system functions such as fan speed and the system front panel, and manage clocking, resets, and boots.

  Depending on the MX chassis and the level of redundancy, the number of SCBs can vary. The MX240 and MX480 require two SCBs for 1+1 redundancy, whereas the MX960 requires three SCBs for 2+1 redundancy.

  There are four generations of SCBs for MX Series 5G Universal Routing Platforms: SCB-MX, SCBE-MX, SCBE2-MX, and SCBE3-MX. See the following topics for more information about SCBs:

  - *MX-Series Switch Control Board (SCB) Overview*
  - *SCBE3-MX Description*
  - *SCBE2-MX Description*
  - *SCBE-MX Description*
  - *SCB-MX Description*

- MX-ADC is a special line card adapter (ADC) for line cards that were designed to work with the MX-SCB and MX-SCBE line cards (MPC1E, MPC2E, and MPC3E). It is supported only for MX2010 and MX2020 routers. The ADC is a hardware casing that fits into a line card slot. The MPCs attach to the ADCs which in turn attach to the backplane. See the following topics for more information about the MX-ADC:

  - *MX2000 Adapter Card (ADC) Description*

- Routing Engines (REs) and Control Boards with Routing Engines (CB-REs) provide the software processes that run Junos OS. The routing engine maintains the routing tables, manages the routing protocols used on the router, controls the router interfaces, controls some chassis components, and provides the interface for system management and user access to the router. Each CB-RE is a combined Routing Engine and Switch Control Board in one unit. See the following topics for information about REs and CB-REs for MX routers:

  - *MX2000 Host Subsystem CB-RE Description*
  - *MX960 Routing Engine Description*
  - *MX480 Routing Engine Description*
  - *MX240 Routing Engine Description*
  - *MX5, MX10, MX40, and MX80 Routing Engine Description*
  - *RE-S-X6-64G Routing Engine Description*
  - *RE-MX2000-1800x4 CB-RE Description*
  - *REMX2K-X8-64G and REMX2K-X8-64G-LT CB-RE Description*
  - *Routing Engine Specifications*

Copyright © 2019, Juniper Networks, Inc.

Copyright © 2019, Juniper Networks, Inc.

CHAPTER 2

DPCs Supported on MX Series Routers

- MX Series DPC Overview on page 7
- DPCs Supported on MX240, MX480, and MX960 Routers on page 8

MX Series DPC Overview

A Dense Port Concentrator (DPC) provides multiple physical interfaces and Packet Forwarding Engines (PFEs) on a single board that installs into a slot within the MX240, MX480, and MX960 routers. A DPC receives incoming packets from the network and sends outgoing packets to the network. The PFEs on a DPC are equipped with purpose-built ASICs that perform packet processing and forwarding.

In addition to Layer 3 routing capabilities, the DPCs also have many Layer 2 functions that allow MX Series routers to be used for many virtual LAN (VLAN) and other Layer 2 network applications.

NOTE: **In the Junos OS CLI, you use the FPC syntax to configure or display information about DPCs, and you use the PIC syntax to configure or display information about Packet Forwarding Engines on the DPCs.**

DPCs install vertically in the MX960 router chassis and horizontally in the MX480 and MX240 router chassis. The maximum number of supported DPCs varies per router:

- MX960 router—up to 12 DPCs
- MX480 router—up to 6 DPCs
- MX240 router—up to 3 DPCs

When a slot is not occupied by a DPC, you must insert a blank DPC to fill the empty slot and ensure proper cooling of the system. For complete information about installing and handling DPCs, see the hardware guide for your router.

Related Documentation

- DPCs Supported on MX240, MX480, and MX960 Routers on page 8
- Protocols and Applications Supported by DPCs and Enhanced DPCs (DPC and DPCE-R) on page 251

Copyright © 2019, Juniper Networks, Inc.

- Protocols and Applications Supported by Enhanced Ethernet Services DPCs (DPCE-X) on page 257
- Protocols and Applications Supported by Enhanced Queuing IP Services DPCs (DPCE-R-Q) on page 261
- Protocols and Applications Supported by Enhanced Queuing Ethernet Services DPCs (DPCE-X-Q) on page 266
- Protocols and Applications Supported by the Multiservices DPC (MS-DPC) on page 271

DPCs Supported on MX240, MX480, and MX960 Routers

NOTE: **These DPCs have all been announced as End of Life (EOL). The End of Support (EOS) milestone dates for each model are published at** https://www.juniper.net/support/eol/mseries_hw.html.

Table 3 on page 8 lists the DPCs supported by the MX240, MX480, and MX960 routers.

Table 3: DPCs Supported in MX240, MX480, and MX960 Routers

DPC Name	DPC Model Number	Ports	Maximum Throughput per DPC	First Junos OS Release
Gigabit Ethernet				
"Gigabit Ethernet DPC with SFP" on page 50	DPC-R-40GE-SFP EOL (see PSN-2009-06-400)	40	40 Gbps	8.2
"Gigabit Ethernet Enhanced DPC with SFP" on page 52	DPCE-R-40GE-SFP EOL (see PSN-TSB16810)	40	40 Gbps	8.4
"Gigabit Ethernet Enhanced Ethernet Services DPC with SFP" on page 54	DPCE-X-40GE-SFP EOL (see PSN-TSB16810)	40	40 Gbps	8.4
"Gigabit Ethernet Enhanced Queuing Ethernet Services DPC with SFP" on page 56	DPCE-X-Q-40GE-SFP EOL (see PSN-2013-02-851)	40	40 Gbps	8.5
"Gigabit Ethernet Enhanced Queuing IP Services DPCs with SFP" on page 58	DPCE-R-Q-20GE-SFP EOL (see PSN-2013-02-851)	20	20 Gbps	9.1

Copyright © 2019, Juniper Networks, Inc.

Table 3: DPCs Supported in MX240, MX480, and MX960 Routers (continued)

DPC Name	DPC Model Number	Ports	Maximum Throughput per DPC	First Junos OS Release
"Gigabit Ethernet Enhanced Queuing IP Services DPCs with SFP" on page 58	DPCE-R-Q-40GE-SFP EOL (see PSN-2011-07-314)	40	40 Gbps	8.5
"10-Gigabit Ethernet DPC with XFP" on page 61	DPC-R-4XGE-XFP EOL (see PSN-2009-06-400)	4	40 Gbps	8.2
10-Gigabit Ethernet				
"10-Gigabit Ethernet Enhanced DPCs with XFP" on page 63	DPCE-R-2XGE-XFP EOL (see PSN-2011-02-314)	2	20 Gbps	9.1
"10-Gigabit Ethernet Enhanced DPCs with XFP" on page 63	DPCE-R-4XGE-XFP EOL (see PSN-TSB16810)	4	40 Gbps	8.4
"10-Gigabit Ethernet Enhanced Ethernet Services DPC with XFP" on page 65	DPCE-X-4XGE-XFP EOL (see PSN-TSB16810)	4	40 Gbps	8.4
"10-Gigabit Ethernet Enhanced Queuing Ethernet Services DPC with XFP" on page 67	DPCE-X-Q-4XGE-XFP EOL (see PSN-2013-02-851)	4	40 Gbps	8.5
"10-Gigabit Ethernet Enhanced Queuing IP Services DPC with XFP" on page 69	DPCE-R-Q-4XGE-XFP EOL (see PSN-2011-02-314)	4	40 Gbps	8.5
Mulit-Rate Ethernet				
"Multi-Rate Ethernet Enhanced DPC with SFP and XFP" on page 71	DPCE-R-20GE-2XGE EOL (see PSN-TSB16810)	22	40 Gbps	9.2
"Multi-Rate Ethernet Enhanced Ethernet Services DPC with SFP and XFP" on page 73	DPCE-X-20GE-2XGE EOL (see PSN-2011-02-314)	22	40 Gbps	9.2

Copyright © 2019, Juniper Networks, Inc.

Table 3: DPCs Supported in MX240, MX480, and MX960 Routers (continued)

DPC Name	DPC Model Number	Ports	Maximum Throughput per DPC	First Junos OS Release
"Multi-Rate Ethernet Enhanced Queuing IP Services DPC with SFP and XFP" on page 75	DPCE-R-Q-20GE-2XGE EOL (see PSN-TSB16810)	22	40 Gbps	9.3
Tri-Rate Ethernet				
"Tri-Rate Enhanced DPC" on page 79	DPCE-R-40GE-TX EOL (see PSN-2013-02-851)	40	40 Gbps	9.1
"Tri-Rate Enhanced Ethernet Services DPC" on page 81	DPCE-X-40GE-TX EOL (see PSN-2011-07-315.)	40	40 Gbps	9.1
Services				
"Multiservices DPC" on page 77	MS-DPC EOL (see PSN-TSB16812)	2 (Not supported)	–	9.3

Related Documentation

- Protocols and Applications Supported by DPCs and Enhanced DPCs (DPC and DPCE-R) on page 251
- Protocols and Applications Supported by Enhanced Ethernet Services DPCs (DPCE-X) on page 257
- Protocols and Applications Supported by Enhanced Queuing IP Services DPCs (DPCE-R-Q) on page 261
- Protocols and Applications Supported by Enhanced Queuing Ethernet Services DPCs (DPCE-X-Q) on page 266
- Protocols and Applications Supported by the Multiservices DPC (MS-DPC) on page 271

Copyright © 2019, Juniper Networks, Inc.

CHAPTER 3

MPCs Supported on MX Series Routers

- MX Series MPC Overview on page 11
- MPCs Supported by MX Series Routers on page 12

MX Series MPC Overview

Modular Port Concentrators (MPCs) provide packet forwarding services. The MPCs are inserted into a slot in an MX240, MX480, MX960, MX2008, MX2010, MX2020, and MX10003 router. MPCs for MX5, MX10, MX40, MX80, and MX104 routers install directly into the router chassis. Modular Interface Cards (MICs) provide the physical interfaces and install into the MPCs. You can install up to two MICs of different media types in the same MPC as long as the MPC supports those MICs.

A specialized fixed configuration MPC provides higher port density over MICs and combines packet forwarding and Ethernet interfaces onto a single line card. The fixed configuration MPC is inserted into a slot in a router and contains no slots for MICs.

MICs receive incoming packets from the network and transmit outgoing packets to the network. During this process, each MIC performs framing and high-speed signaling for its media type. Before transmitting outgoing data packets through the MIC interfaces, the MPCs encapsulate the packets received. Each MPC is equipped with up to four Junos Trio chipsets, which perform control functions tailored to the MPC's media type.

You must install a high-capacity fan tray to use an MPC. When a slot is not occupied by an MPC, you must insert a blank DPC to fill the empty slot and ensure proper cooling of the system. For complete information about installing and handling MPCs, see the hardware guide for your router.

The maximum number of supported MPCs varies per router and hardware configuration:

- MX2020 router—Up to 20 MPCs (For power requirements, see *Calculating AC Power Requirements for MX2020 Routers* and *Calculating DC Power Requirements for MX2020 Routers*).
- MX2010 router—Up to 10 MPCs (For power requirements, see *Calculating AC Power Requirements for MX2010 Routers* and *Calculating DC Power Requirements for MX2010 Routers*.)
- MX960 router—Up to 12 MPCs (For power requirements, see *Calculating Power Requirements for MX960 Routers*.)

Copyright © 2019, Juniper Networks, Inc.

- MX480 router—Up to 6 MPCs (For power requirements, see*Calculating Power Requirements for MX480 Routers*.)
- MX240 router—Up to 3 MPCs (For power requirements, see *Calculating Power Requirements for MX240 Routers*.)

MX80 router—One fixed 10-Gigabit Ethernet MIC with four ports for uplink connections.

NOTE: The MX80 router is available as a modular (MX80) or fixed (MX80-48T) chassis. Both chassis have a fixed Modular Interface Card (MIC) that has 3 10-Gigabit Ethernet ports. The fixed MX80 router has an additional 48 10/100/1000Base-T RJ45 ports. The modular chassis has two dedicated slots for MICs.

Related Documentation

- MPCs Supported by MX Series Routers on page 12
- Protocols and Applications Supported on MPCs for MX Series Routers on page 273
- Protocols and Applications Supported by the MPC3E on MX Series Routers on page 296
- Protocols and Applications Supported on the MPC4E for MX Series Routers on page 303
- Protocols and Applications Supported by the MPC5E for MX Series Routers on page 311
- Protocols and Applications Supported by the MPC6E for MX2000 Routers on page 317
- MX Series MIC Overview on page 17
- MICs Supported by MX Series Routers on page 18

MPCs Supported by MX Series Routers

Table 4 on page 12 lists the MPCs and their first supported Junos OS release on MX240, MX480, MX960, MX2008, MX2010, MX2020, and MX10003 routers.

Table 4: MPCs Supported by MX240, MX480, MX960, MX2008, MX2010, MX2020, and MX10003 Routers

MPC Name	MPC Model Number	First Junos OS Release on MX240, MX480, and MX960 Routers	First Junos OS Release on MX2008 Routers	First Junos OS Release on MX2010 Routers	First Junos OS Release on MX2020 Routers	First Junos OS Release on MX10003 Routers	First Junos OS Release on MX10008 Routers
Fixed Configuration MPCs							
"16x10GE MPC" on page 84	MPC-3D-16XGE-SFP	10.0R2	15.1F7	12.3	12.3	–	–

Copyright © 2019, Juniper Networks, Inc.

Table 4: MPCs Supported by MX240, MX480, MX960, MX2008, MX2010, MX2020, and MX10003 Routers (continued)

MPC Name	MPC Model Number	First Junos OS Release on MX240, MX480, and MX960 Routers	First Junos OS Release on MX2008 Routers	First Junos OS Release on MX2010 Routers	First Junos OS Release on MX2020 Routers	First Junos OS Release on MX10003 Routers	First Junos OS Release on MX10008 Routers
"Multiservices MPC" on page 86	MS-MPC	13.2R4	15.1F7	15.1	15.1	–	–
"32x10GE MPC4E" on page 119	MPC4E-3D-32XGE-SFPP	12.3R2	15.1F7	12.3R2	12.3R2	–	–
"2x100GE + 8x10GE MPC4E" on page 120	MPC4E-3D-2CGE-8XGE	12.3R2	15.1F7	12.3R2	12.3R2	–	–
"6x40GE + 24x10GE MPC5E" on page 122	MPC5E-40G10G	13.3R2	15.1F7	13.3R2	13.3R2	–	–
"6x40GE + 24x10GE MPC5EQ" on page 124	MPC5EQ-40G10G	13.3R2	15.1F7	13.3R2	13.3R2	–	–
"2x100GE + 4x10GE MPC5E" on page 126	MPC5E-100G10G	13.3R3	15.1F7	13.3R3	13.3R3	–	–
"2x100GE + 4x10GE MPC5EQ" on page 127	MPC5EQ-100G10G	13.3R3	15.1F7	13.3R3	13.3R3	–	–
"MPC7E (Multi-Rate)" on page 130	MPC7E-MRATE	• 15.1F4 with Junos Continuity • 16.1R1 and later	15.1F7	• 15.1F4 with Junos Continuity • 16.1R1 and later	• 15.1F4 with Junos Continuity • 16.1R1 and later	–	–
"MPC7E 10G" on page 132	MPC7E-10G	• 15.1F5 with Junos Continuity • 16.1R1 and later	15.1F7	• 15.1F5 with Junos Continuity • 16.1R1 and later	• 15.1F5 with Junos Continuity • 16.1R1 and later	–	–
MPCs							
"MPC1" on page 88	MX-MPC1-3D	10.2	15.1F7	12.3	12.3	–	–

Table 4: MPCs Supported by MX240, MX480, MX960, MX2008, MX2010, MX2020, and MX10003 Routers (continued)

MPC Name	MPC Model Number	First Junos OS Release on MX240, MX480, and MX960 Routers	First Junos OS Release on MX2008 Routers	First Junos OS Release on MX2010 Routers	First Junos OS Release on MX2020 Routers	First Junos OS Release on MX10003 Routers	First Junos OS Release on MX10008 Routers
"MPC1E" on page 89	MX-MPC1E-3D	11.2R4	15.1F7	12.3	12.3	–	–
"MPC1 Q" on page 91	MX-MPC1-3D-Q	10.2	15.1F7	12.3	12.3	–	–
"MPC1E Q" on page 93	MX-MPC1E-3D-Q	11.2R4	15.1F7	12.3	12.3	–	–
"MPC2" on page 95	MX-MPC2-3D	10.1	15.1F7	12.3	12.3	–	–
"MPC2E" on page 97	MX-MPC2E-3D	11.2R4	15.1F7	12.3	12.3	–	
"MPC2 Q" on page 99	MX-MPC2-3D-Q	10.1	15.1F7	12.3	12.3	–	–
"MPC2E Q" on page 101	MX-MPC2E-3D-Q	11.2R4	15.1F7	12.3	12.3	–	–
"MPC2 EQ" on page 103	MX-MPC2-3D-EQ	10.1	15.1F7	12.3	12.3	–	–
"MPC2E EQ" on page 105	MX-MPC2E-3D-EQ	11.2R4	15.1F7	12.3	12.3	–	–
"MPC2E P" on page 107	MX-MPC2E-3D-P	12.2	15.1F7	12.3	12.3	–	–
"MPC2E NG" on page 109	MX-MPC2E-3D-NG	14.1R4, 14.2R3 and Junos Continuity 15.1	15.1F7	14.1R4, 14.2R3 and Junos Continuity 15.1	14.1R4, 14.2R3 and Junos Continuity 15.1	–	–
"MPC2E NG Q" on page 111	MX-MPC2E-3D-NG-Q	14.1R4, 14.2R3 and Junos Continuity 15.1	15.1F7	14.1R4, 14.2R3 and Junos Continuity 15.1	14.1R4, 14.2R3 and Junos Continuity 15.1	–	–
"MPC3E" on page 113	MX-MPC3E-3D	12.1	15.1F7	12.3	12.3	–	–
"MPC3E NG" on page 115	MX-MPC3E-3D-NG	14.1R4, 14.2R3 and Junos Continuity 15.1	15.1F7	14.1R4, 14.2R3 and Junos Continuity 15.1	14.1R4, 14.2R3 and Junos Continuity 15.1	–	–

Copyright © 2019, Juniper Networks, Inc.

Table 4: MPCs Supported by MX240, MX480, MX960, MX2008, MX2010, MX2020, and MX10003 Routers (continued)

MPC Name	MPC Model Number	First Junos OS Release on MX240, MX480, and MX960 Routers	First Junos OS Release on MX2008 Routers	First Junos OS Release on MX2010 Routers	First Junos OS Release on MX2020 Routers	First Junos OS Release on MX10003 Routers	First Junos OS Release on MX10008 Routers
"MPC3E NG Q" on page 117	MX-MPC3E-3D-NG-Q	14.1R4, 14.2R3 and Junos Continuity 15.1	15.1F7	14.1R4, 14.2R3 and Junos Continuity 15.1	14.1R4, 14.2R3 and Junos Continuity 15.1	–	–
"MPC6E" on page 129	MX2K-MPC6E	–	15.1F7	13.3R2	13.3R2	–	–
"MPC8E" on page 134	MX2K-MPC8E	–	15.1F7	• 15.1F5 with Junos Continuity • 16.1R1 and later	• 15.1F5 with Junos Continuity • 16.1R1 and later	–	–
"MPC9E" on page 135	MX2K-MPC9E	–	15.1F7	• 15.1F5 with Junos Continuity • 16.1R1 and later	• 15.1F5 with Junos Continuity • 16.1R1 and later	–	–
"MX10003 MPC (Multi-Rate)" on page 139	MX10003-LC2103	–	–	–	–	17.3	
"Line card (MX10K-LC2101)" on page 140	JNP10K-LC2101	–	–	–	–	–	18.2R1
"MPC10E-15C-MRATE" on page 137	MPC10E-15C-MRATE	19.1R1	–	–	–	–	–

Related Documentation

- MX Series MPC Overview on page 11
- MIC/MPC Compatibility on page 26
- MX Series MIC Overview on page 17
- MICs Supported by MX Series Routers on page 18

- *Junos Continuity Software Overview*
- Pathfinder: Hardware Supported by Junos Continuity Software

Copyright © 2019, Juniper Networks, Inc.

CHAPTER 4

MICs Supported on MX Series Routers

- MX Series MIC Overview on page 17
- MICs Supported by MX Series Routers on page 18
- MIC/MPC Compatibility on page 26

MX Series MIC Overview

MICs provide the physical connections to various network media types. MICs allow different physical interfaces to be supported on a single line card. You can install MICs of different media types on the same router as long as the router supports those MICs.

MICs receive incoming packets from the network and transmit outgoing packets to the network. During this process, each MIC performs framing and high-speed signaling for its media type. MICs install into Modular Port Concentrators (MPCs) which provide packet forwarding services. Before transmitting outgoing data packets through the MIC interfaces, the Modular Port Concentrator (MPCs) encapsulate the packets received. Each MPC is equipped with up to four Junos Trio chipsets, which perform control functions tailored to the MPC's media type.

MICs and MPCs function similarly to PICs and FPCs. MICs are hot-removable and hot-insertable. You can install up to two MICs of different media types in the same MPC as long as the MPC supports those MICs. Depending on the MX router chassis, the MICs install vertically or horizontally into MPCs, or directly into the MX router chassis as follows:

- Vertically into MPCs— MX960, MX2008, MX2010, and MX2020 routers
- Horizontally into MPCs—MX10003, MX480, and MX240 routers
- Directly into the router chassis—MX5, MX10, MX40, MX80, and MX104 routers

NOTE: The MX80 router is available as a modular (MX80) or fixed (MX80-48T) chassis. Both chassis have a fixed Modular Interface Card (MIC) that has 3 10-Gigabit Ethernet ports. The fixed MX80 router has an additional 48 10/100/1000Base-T RJ45 ports. The modular chassis has two dedicated slots for MICs.

Related Documentation

- MX Series MPC Overview on page 11
- MICs Supported by MX Series Routers on page 18
- MIC/MPC Compatibility on page 26
- MPCs Supported by MX Series Routers on page 12

MICs Supported by MX Series Routers

The following tables list the first supported Junos OS release for the MX Series.

- Table 5 on page 18 lists the first supported Junos OS release for MICs on MX240, MX480, MX960, and MX2008 routers.
- Table 6 on page 20 lists the first supported Junos OS release for MICs on MX2010 and MX2020 routers.
- Table 7 on page 22 list the first supported Junos OS release for MICs on MX5, MX10, and MX40 routers.
- Table 8 on page 24 lists the first supported Junos OS release for MICs on MX80 and MX104 routers.
- Table 9 on page 26 lists the first supported Junos OS release for MICs on MX10003 router.

Table 5: MICs Supported by MX240, MX480, MX960 and MX2008 Routers

MIC Name	MIC Model Number	Ports	MX240, MX480, and MX960 Routers	MX2008 Routers
ATM				
"ATM MIC with SFP" on page 144	MIC-3D-8OC3-2OC12-ATM	8	12.1	15.1F7
DS3/E3				
"DS3/E3 MIC" on page 147	MIC-3D-8DS3-E3, MIC-3D-8CHDS3-E3-B	8	11.4	15.1F7
Circuit Emulation				
"Channelized E1/T1 Circuit Emulation MIC" on page 193	MIC-3D-16CHE1-T1-CE	16	12.3	15.1F7
Gigabit Ethernet				
"Gigabit Ethernet MIC with SFP" on page 151	MIC-3D-20GE-SFP	20	10.1	15.1F7
"Gigabit Ethernet MIC with SFP (E)" on page 154	MIC-3D-20GE-SFP-E	20	13.3	15.1F7

Copyright © 2019, Juniper Networks, Inc.

Table 5: MICs Supported by MX240, MX480, MX960 and MX2008 Routers (continued)

MIC Name	MIC Model Number	Ports	MX240, MX480, and MX960 Routers	MX2008 Routers
Gigabit Ethernet MIC with 256b-AES MACSEC	MIC-MACSEC-20GE	20	18.3	-
10-Gigabit Ethernet				
"10-Gigabit Ethernet MICs with XFP" on page 159	MIC-3D-2XGE-XFP	2	10.2	15.1F7
"10-Gigabit Ethernet MICs with XFP" on page 159	MIC-3D-4XGE-XFP	4	10.1	15.1F7
"10-Gigabit Ethernet MIC with SFP+ (10 Ports)" on page 162	MIC3-3D-10XGE-SFPP	10	12.3	15.1F7
"10-Gigabit Ethernet MIC with SFP+ (24 Ports)" on page 164	MIC6-10G	24	-	15.1F7
"10-Gigabit Ethernet OTN MIC with SFP+ (24 Ports)" on page 165	MIC6-10G-OTN	24	-	15.1F7
40-Gigabit Ethernet				
"40-Gigabit Ethernet MIC with QSFP+" on page 167	MIC3-3D-2X40GE-QSFPP	2	12.2	15.1F7
100-Gigabit Ethernet				
"100-Gigabit Ethernet MIC with CFP" on page 168	MIC3-3D-1X100GE-CFP	1	12.1	15.1F7
"100-Gigabit Ethernet MIC with CXP" on page 170	MIC3-3D-1X100GE-CXP	1	12.2	15.1F7
"100-Gigabit Ethernet MIC with CXP (4 Ports)" on page 171	MIC6-100G-CXP	4	-	15.1F7
"100-Gigabit Ethernet MIC with CFP2" on page 172	MIC6-100G-CFP2	2	-	15.1F7
100-Gigabit DWDM OTN				
"100-Gigabit DWDM OTN MIC with CFP2-ACO" on page 174	MIC3-100G-DWDM	1	15.1F5 15.1F6 17.1R1	15.1F7
Multi-Rate				
"SONET/SDH OC3/STM1 (Multi-Rate) MICs with SFP" on page 206	MIC-3D-4OC3OC12-1OC48	4	11.2	15.1F7

Copyright © 2019, Juniper Networks, Inc.

Table 5: MICs Supported by MX240, MX480, MX960 and MX2008 Routers (continued)

MIC Name	MIC Model Number	Ports	MX240, MX480, and MX960 Routers	MX2008 Routers
"SONET/SDH OC3/STM1 (Multi-Rate) MICs with SFP" on page 206	MIC-3D-8OC3OC12-4OC48	8	11.2	15.1F7
"Channelized SONET/SDH OC3/STM1 (Multi-Rate) MICs with SFP" on page 183	MIC-3D-4CHOC3-2CHOC12	4	11.4	15.1F7
"Channelized SONET/SDH OC3/STM1 (Multi-Rate) MICs with SFP" on page 183	MIC-3D-8CHOC3-4CHOC12	8	11.4	15.1F7
"Channelized OC3/STM1 (Multi-Rate) Circuit Emulation MIC with SFP" on page 188	MIC-3D-4COC3-1COC12-CE	4	12.2	15.1F7
"MIC MRATE" on page 203 (12-Port Multi-Rate MIC with QSFP+)	MIC-MRATE	12	-	15.1F7
"Multi-Rate Ethernet MIC" on page 210 (12-Port Multi-Rate MACsec MIC with QSFP+)	MIC-MACSEC-MRATE	12		17.4
Tri-Rate				
"Tri-Rate MIC" on page 199	MIC-3D-40GE-TX	40	10.2	15.1F7
Services				
"Multiservices MIC" on page 205	MS-MIC-16G	0	13.2	15.1F7
SONET/SDH				
"SONET/SDH OC192/STM64 MIC with XFP" on page 215	MIC-3D-1OC192-XFP	1	12.2	15.1F7

Table 6: MICs Supported by MX2010 and MX2020 Routers

MIC Name	MIC Model Number	Ports	MX2010 Routers	MX2020 Routers
ATM				
"ATM MIC with SFP" on page 144	MIC-3D-8OC3-2OC12-ATM	8	12.3	12.3
DS3/E3				
"DS3/E3 MIC" on page 147	MIC-3D-8DS3-E3, MIC-3D-8CHDS3-E3-B	8	12.3	12.3

Copyright © 2019, Juniper Networks, Inc.

Table 6: MICs Supported by MX2010 and MX2020 Routers (continued)

MIC Name	MIC Model Number	Ports	MX2010 Routers	MX2020 Routers
Circuit Emulation				
"Channelized E1/T1 Circuit Emulation MIC" on page 193	MIC-3D-16CHE1-T1-CE	16	–	–
Gigabit Ethernet				
"Gigabit Ethernet MIC with SFP" on page 151	MIC-3D-20GE-SFP	20	12.3	12.3
"Gigabit Ethernet MIC with SFP (E)" on page 154	MIC-3D-20GE-SFP-E	20	13.3	13.3
10-Gigabit Ethernet				
"10-Gigabit Ethernet MICs with XFP" on page 159	MIC-3D-2XGE-XFP	2	12.3	12.3
"10-Gigabit Ethernet MICs with XFP" on page 159	MIC-3D-4XGE-XFP	4	12.3	12.3
"10-Gigabit Ethernet MIC with SFP+ (10 Ports)" on page 162	MIC3-3D-10XGE-SFPP	10	12.3	12.3
"10-Gigabit Ethernet MIC with SFP+ (24 Ports)" on page 164	MIC6-10G	24	13.3R2	13.3R2
"10-Gigabit Ethernet OTN MIC with SFP+ (24 Ports)" on page 165	MIC6-10G-OTN	24	13.3R3	13.3R3
40-Gigabit Ethernet				
"40-Gigabit Ethernet MIC with QSFP+" on page 167	MIC3-3D-2X40GE-QSFPP	2	12.3	12.3
100-Gigabit Ethernet				
"100-Gigabit Ethernet MIC with CFP" on page 168	MIC3-3D-1X100GE-CFP	1	12.3	12.3
"100-Gigabit Ethernet MIC with CXP" on page 170	MIC3-3D-1X100GE-CXP	1	12.3	12.3
"100-Gigabit Ethernet MIC with CXP (4 Ports)" on page 171	MIC6-100G-CXP	4	13.3R2	13.3R2
"100-Gigabit Ethernet MIC with CFP2" on page 172	MIC6-100G-CFP2	2	13.3R3	13.3R3
100-Gigabit DWDM OTN				

Copyright © 2019, Juniper Networks, Inc.

Table 6: MICs Supported by MX2010 and MX2020 Routers (continued)

MIC Name	MIC Model Number	Ports	MX2010 Routers	MX2020 Routers
"100-Gigabit DWDM OTN MIC with CFP2-ACO" on page 174	MIC3-100G-DWDM	1	15.1F5 15.1F6 17.1R1	15.1F5 15.1F6 17.1R1
Multi-Rate				
"SONET/SDH OC3/STM1 (Multi-Rate) MICs with SFP" on page 206	MIC-3D-4OC3OC12-1OC48	4	12.3	12.3
"SONET/SDH OC3/STM1 (Multi-Rate) MICs with SFP" on page 206	MIC-3D-8OC3OC12-4OC48	8	12.3	12.3
"Channelized SONET/SDH OC3/STM1 (Multi-Rate) MICs with SFP" on page 183	MIC-3D-4CHOC3-2CHOC12	4	12.3	12.3
"Channelized SONET/SDH OC3/STM1 (Multi-Rate) MICs with SFP" on page 183	MIC-3D-8CHOC3-4CHOC12	8	12.3	12.3
"Channelized OC3/STM1 (Multi-Rate) Circuit Emulation MIC with SFP" on page 188	MIC-3D-4COC3-1COC12-CE	4	12.3	12.3
"MIC MRATE" on page 203 (12-Port Multi-Rate MIC with QSFP+)	MIC-MRATE	12	• 15.1F5 with Junos Continuity • 16.1R1 and later	• 15.1F5 with Junos Continuity • 16.1R1 and later
"Multi-Rate Ethernet MIC" on page 210 (12-Port Multi-Rate MACsec MIC with QSFP+)	MIC-MACSEC-MRATE	12	17.4	17.4
Tri-Rate				
"Tri-Rate MIC" on page 199	MIC-3D-40GE-TX	40	12.3	12.3
Services				
"Multiservices MIC" on page 205	MS-MIC-16G	0	13.2	13.2
SONET/SDH				
"SONET/SDH OC192/STM64 MIC with XFP" on page 215	MIC-3D-1OC192-XFP	1	12.3	12.3

Table 7: MICs Supported by MX5, MX10, and MX40 Routers

MIC Name	MIC Model Number	Ports	MX5	MX10	MX40
ATM					

Copyright © 2019, Juniper Networks, Inc.

Table 7: MICs Supported by MX5, MX10, and MX40 Routers (continued)

MIC Name	MIC Model Number	Ports	MX5	MX10	MX40
"ATM MIC with SFP" on page 144	MIC-3D-8OC3-2OC12-ATM	8	12.1	12.1	12.1
DS3/E3					
"DS3/E3 MIC" on page 147	MIC-3D-8DS3-E3, MIC-3D-8CHDS3-E3-B	8	11.4	11.4	11.4
Circuit Emulation					
"Channelized E1/T1 Circuit Emulation MIC" on page 193	MIC-3D-16CHE1-T1-CE	16	13.2R2	13.2R2	13.2R2
"Channelized E1/T1 Circuit Emulation MIC (H)" on page 196	MIC-3D-16CHE1-T1-CE-H	16	–	–	–
Gigabit Ethernet					
"Gigabit Ethernet MIC with SFP" on page 151	MIC-3D-20GE-SFP	20	11.2R4	11.2R4	11.2R4
"Gigabit Ethernet MIC with SFP (E)" on page 154	MIC-3D-20GE-SFP-E	20	13.2R2	13.2R2	13.2R2
"Gigabit Ethernet MIC with SFP (EH)" on page 158	MIC-3D-20GE-SFP-EH	20	–	–	–
10-Gigabit Ethernet					
"10-Gigabit Ethernet MICs with XFP" on page 159	MIC-3D-2XGE-XFP	2	11.2R4	11.2R4	11.2R4
Multi-Rate					
"SONET/SDH OC3/STM1 (Multi-Rate) MICs with SFP" on page 206	MIC-3D-4OC3OC12-1OC48	4	11.2R4	11.2R4	11.2R4
"SONET/SDH OC3/STM1 (Multi-Rate) MICs with SFP" on page 206	MIC-3D-8OC3OC12-4OC48	8	11.2R4	11.2R4	11.2R4
"Channelized SONET/SDH OC3/STM1 (Multi-Rate) MICs with SFP" on page 183	MIC-3D-4CHOC3-2CHOC12	4	11.4	11.4	11.4
"Channelized SONET/SDH OC3/STM1 (Multi-Rate) MICs with SFP" on page 183	MIC-3D-8CHOC3-4CHOC12	8	11.4	11.4	11.4
"Channelized OC3/STM1 (Multi-Rate) Circuit Emulation MIC with SFP" on page 188	MIC-3D-4COC3-1COC12-CE	4	12.2	12.2	12.2

Copyright © 2019, Juniper Networks, Inc.

Table 7: MICs Supported by MX5, MX10, and MX40 Routers (continued)

MIC Name	MIC Model Number	Ports	MX5	MX10	MX40
"Channelized OC3/STM1 (Multi-Rate) Circuit Emulation MIC with SFP (H)" on page 190	MIC-4COC3-1COC12-CE-H	-	-	-	-
Tri-Rate					
"Tri-Rate MIC" on page 199	MIC-3D-40GE-TX	40	–	11.2R4	11.2R4
Services					
"Multiservices MIC" on page 205	MS-MIC-16G	0	13.2 Rear slot only.	13.2 Rear slot only.	13.2 Rear slot only.
"SONET/SDH OC192/STM64 MIC with XFP" on page 215	MIC-3D-1OC192-XFP	1	12.2	12.2	12.2

Table 8: MICs Supported by MX80 and MX104 Routers

MIC Name	MIC Model Number	Ports	MX80	MX104
ATM				
"ATM MIC with SFP" on page 144	MIC-3D-8OC3-2OC12-ATM	8	12.1	13.3
DS3/E3				
"DS3/E3 MIC" on page 147	MIC-3D-8DS3-E3, MIC-3D-8CHDS3-E3-B	8	11.4	13.3
Circuit Emulation				
"Channelized E1/T1 Circuit Emulation MIC" on page 193	MIC-3D-16CHE1-T1-CE	16	13.2R2	13.2R2
"Channelized E1/T1 Circuit Emulation MIC (H)" on page 196	MIC-3D-16CHE1-T1-CE-H	16	–	13.2R2
Gigabit Ethernet				
"Gigabit Ethernet MIC with SFP" on page 151	MIC-3D-20GE-SFP	20	10.2	13.2R2
"Gigabit Ethernet MIC with SFP (E)" on page 154	MIC-3D-20GE-SFP-E	20	13.2R2	13.2R2
"Gigabit Ethernet MIC with SFP (EH)" on page 158	MIC-3D-20GE-SFP-EH	20	–	13.2R2
Gigabit Ethernet MIC with 256b-AES MACSEC	MIC-MACSEC-20GE	20	18.3	18.3

Copyright © 2019, Juniper Networks, Inc.

Table 8: MICs Supported by MX80 and MX104 Routers (continued)

MIC Name	MIC Model Number	Ports	MX80	MX104
"10-Gigabit Ethernet MICs with XFP" on page 159	MIC-3D-2XGE-XFP	2	10.2	13.2R2
Multi-Rate				
"SONET/SDH OC3/STM1 (Multi-Rate) MICs with SFP" on page 206	MIC-3D-4OC3OC12-1OC48	4	11.2	13.3
"SONET/SDH OC3/STM1 (Multi-Rate) MICs with SFP" on page 206	MIC-3D-8OC3OC12-4OC48	8	11.2	13.3
"Channelized SONET/SDH OC3/STM1 (Multi-Rate) MICs with SFP" on page 183	MIC-3D-4CHOC3-2CHOC12	4	11.4	13.3
"Channelized SONET/SDH OC3/STM1 (Multi-Rate) MICs with SFP" on page 183	MIC-3D-8CHOC3-4CHOC12	8	11.4	13.3
"Channelized OC3/STM1 (Multi-Rate) Circuit Emulation MIC with SFP" on page 188	MIC-3D-4COC3-1COC12-CE	4	12.2	13.2R2
"Channelized OC3/STM1 (Multi-Rate) Circuit Emulation MIC with SFP (H)" on page 190	MIC-4COC3-1COC12-CE-H	-	-	13.2R2
Tri-Rate				
"Tri-Rate MIC" on page 199	MIC-3D-40GE-TX	40	10.2	13.2R2
Services				
"Multiservices MIC" on page 205	MS-MIC-16G	0	13.2 Rear slot only. Supported on the modular MX80 and fixed MX80-48T	13.3R2 NOTE: Starting From Junos OS 13.3R3, 14.1R2, and 14.2R1, MX104 supports only two Multiservices MICs.
SONET/SDH				

Table 8: MICs Supported by MX80 and MX104 Routers (continued)

MIC Name	MIC Model Number	Ports	MX80	MX104
"SONET/SDH OC192/STM64 MIC with XFP" on page 215	MIC-3D-1OC192-XFP	1	12.2	13.3

Table 9: MICs Supported by MX10003 Router

MIC Name	MIC Model Number	Ports	MX10003
Multi-Rate			
"Multi-Rate Ethernet MIC" on page 210 (12-Port Multi-Rate MIC with QSFP+)	JNP-MIC1	12	17.3
"Multi-Rate Ethernet MIC" on page 210 (12-Port Multi-Rate MACsec MIC with QSFP+)	JNP-MIC1-MACSEC	12	17.3R2

Related Documentation

- MX Series MIC Overview on page 17
- MIC/MPC Compatibility on page 26

MIC/MPC Compatibility

The following tables provide a compatibility matrix for the MICs currently supported by MPC1, MPC2, MPC3, MPC6, MPC8, and MPC9 on MX240, MX480, MX960, MX2008, MX2010, MX2020, and MX10003 routers. Each table lists the first Junos OS release in which the MPC supports the MIC. For example, Junos OS Release 10.2 is the first release in which the MX-MPC1-3D supports the Gigabit Ethernet MIC with SFP. An en dash indicates that the MIC is not supported.

Table 10: MIC/MPC1 Compatibility

MIC Name	MPC1	MPC1E	MPC1 Q	MPC1E Q
MIC-3D-8OC3-2OC12-ATM ("ATM MIC with SFP" on page 144)	—	—	12.1	12.1R4
MIC-3D-20GE-SFP ("Gigabit Ethernet MIC with SFP" on page 151)	10.2	11.2R4	10.2	11.2R4
MIC-3D-20GE-SFP-E ("Gigabit Ethernet MIC with SFP (E)" on page 154)	13.2R2	13.2R2	13.2R2	13.2R2

Copyright © 2019, Juniper Networks, Inc.

Table 10: MIC/MPC1 Compatibility (continued)

MIC Name	MPC1	MPC1E	MPC1 Q	MPC1E Q
MIC-3D-2XGE-XFP (“10-Gigabit Ethernet MICs with XFP” on page 159)	10.2	11.2R4	10.2	11.2R4
MIC-3D-4XGE-XFP (“10-Gigabit Ethernet MICs with XFP” on page 159)	—	—	—	—
MIC-3D-40GE-TX (“Tri-Rate MIC” on page 199)	10.2	11.2R4	10.2	11.2R4
MIC-3D-4OC3OC12-1OC48, MIC-3D-8OC3OC12-4OC48 (“SONET/SDH OC3/STM1 (Multi-Rate) MICs with SFP” on page 206)	11.2	11.2R4	11.2	11.2R4
MIC-3D-4COC3-1COC12-CE (“Channelized OC3/STM1 (Multi-Rate) Circuit Emulation MIC with SFP” on page 188)	—	—	12.2	12.2
MIC-3D-1OC192-XFP (“SONET/SDH OC192/STM64 MIC with XFP” on page 215)	12.2	12.2	12.2	12.2
MIC-3D-4CHOC3-2CHOC12, MIC-3D-8CHOC3-4CHOC12 MIC-4COC3-2COC12-G, MIC-8COC3-4COC12-G (“Channelized SONET/SDH OC3/STM1 (Multi-Rate) MICs with SFP” on page 183)	—	—	11.4	11.4

Table 10: MIC/MPC1 Compatibility (continued)

MIC Name	MPC1	MPC1E	MPC1 Q	MPC1E Q
MIC-3D-16CHE1-T1-CE (“Channelized E1/T1 Circuit Emulation MIC” on page 193)	13.2 NOTE: Support for Non-Channelized MIC only.	13.2 NOTE: Support for Non-Channelized MIC only.	12.3	12.3
MIC-3D-8DS3-E3, MIC-3D-8CHDS3-E3-B (“DS3/E3 MIC” on page 147) NOTE: You cannot run Channelized DS3 (MIC-3D-8CHDS3-E3) on non-Q MPCs. Channelized DS3 is supported only on Q and EQ-based MPCs.	11.4	11.4	11.4	11.4
MIC-MACSEC-20GE *Gigabit Ethernet MIC with 256b-AES MACSEC*	18.3R1	18.3R1	18.3R1	18.3R1
MS-MIC-16G (“Multiservices MIC” on page 205)	13.2	13.2	13.2	13.2

Table 11: MIC/MPC2 Compatibility

MIC Name	MPC2	MPC2E	MPC2E NG	MPC2 Q	MPC2E Q	MPC2 EQ	MPC2E EQ	MPC2E P	MPC2E NG Q
MIC-3D-8OC3-2OC12-ATM (“ATM MIC with SFP” on page 144)	—	—	14.1R4, 14.2R3 with Junos Continuity 15.1	12.1	12.1R4	12.1	12.1R4	—	14.1R4, 14.2R3 with Junos Continuity 15.1
MIC-3D-20GE-SFP (“Gigabit Ethernet MIC with SFP” on page 151)	10.1	11.2R4	14.1R4, 14.2R3 with Junos Continuity 15.1	10.1	11.2R4	10.1	11.2R4	12.2	14.1R4, 14.2R3 with Junos Continuity 15.1

Copyright © 2019, Juniper Networks, Inc.

Table 11: MIC/MPC2 Compatibility (continued)

MIC Name	MPC2	MPC2E	MPC2E NG	MPC2 Q	MPC2E Q	MPC2 EQ	MPC2E EQ	MPC2E P	MPC2E NG Q
MIC-3D-20GE-SFP-E (“Gigabit Ethernet MIC with SFP (E)” on page 154)	13.2R2	13.2R2	14.1R4, 14.2R3 with Junos Continuity 15.1	13.2R2	13.2R2	13.2R2	13.2R2	13.2R2	14.1R4, 14.2R3 with Junos Continuity 15.1
MIC-3D-2XGE-XFP (“10-Gigabit Ethernet MIC with XFP” on page 159)	10.2	11.2R4	14.1R4, 14.2R3 with Junos Continuity 15.1	10.2	11.2R4	10.2	11.2R4	12.2	14.1R4, 14.2R3 with Junos Continuity 15.1
MIC-3D-4XGE-XFP (“10-Gigabit Ethernet MICs with XFP” on page 159)	10.1	11.2R4	14.1R4, 14.2R3 with Junos Continuity 15.1	10.1	11.2R4	10.1	11.2R4	12.2	14.1R4, 14.2R3 with Junos Continuity 15.1
MIC-3D-40GE-TX (“Tri-Rate MIC” on page 199)	10.2	11.2R4	14.1R4, 14.2R3 with Junos Continuity 15.1	10.2	11.2R4	10.2	11.2R4	12.2	14.1R4, 14.2R3 with Junos Continuity 15.1
MIC-3D-4OC3OC12-1OC48, MIC-3D-8OC3OC12-4OC48 (“SONET/SDH OC3/STM1 (Multi-Rate) MICs with SFP” on page 206)	11.4	11.4	14.1R4, 14.2R3 with Junos Continuity 15.1	11.4	11.4	11.4	11.4	-	14.1R4, 14.2R3 with Junos Continuity 15.1
MIC-3D-4COC3-1COC12-CE (“Channelized OC3/STM1 (Multi-Rate) Circuit Emulation MIC with SFP” on page 188)	—	—	—	12.2	12.2	12.2	12.2	12.2	14.1R4, 14.2R3 with Junos Continuity 15.1
MIC-3D-1OC192-XFP (“SONET/SDH OC192/STM64 MIC with XFP” on page 215)	12.2	12.2	14.1R4, 14.2R3 with Junos Continuity 15.1	12.2	12.2	12.2	12.2	12.2	14.1R4, 14.2R3 with Junos Continuity 15.1

Copyright © 2019, Juniper Networks, Inc.

Table 11: MIC/MPC2 Compatibility (continued)

MIC Name	MPC2	MPC2E	MPC2E NG	MPC2 Q	MPC2E Q	MPC2 EQ	MPC2E EQ	MPC2E P	MPC2E NG Q
MIC-3D-4CHOC3-2CHOC12, MIC-3D-8CHOC3-4CHOC12 MIC-4COC3-2COC12-G, MIC-8COC3-4COC12-G ("Channelized SONET/SDH OC3/STM1 (Multi-Rate) MICs with SFP" on page 183)	—	—	15.1 with flexible queuing option	11.4	11.4	11.4	11.4	—	15.1 14.1R4, 14.2R3 with Junos Continuity
MIC-3D-16CHE1-T1-CE ("Channelized E1/T1 Circuit Emulation MIC" on page 193)	13.2 NOTE: Support for Non-Channelized MIC only.		15.1 with flexible queuing option	12.3	12.3	12.3	12.3	—	14.1R4, 14.2R3 with Junos Continuity 15.1
MIC-3D-8DS3-E3, MIC-3D-8CHDS3-E3-B ("DS3/E3 MIC" on page 147) NOTE: You cannot run Channelized DS3 (MIC-3D-8CHDS3-E3) on non-Q MPCs. Channelized DS3 is supported only on Q and EQ-based MPCs.	11.4	11.4	14.1R4, 14.2R3 with Junos Continuity 15.1	11.4	11.4	11.4	11.4	12.2	14.1R4, 14.2R3 with Junos Continuity 15.1
MS-MIC-16G ("Multiservices MIC" on page 205) NOTE: Only one MS-MIC-16G can be installed into any MPC.	13.2	13.2	14.1R4, 14.2R3 with Junos Continuity 15.1	13.2	13.2	13.2	13.2	13.2	14.1R4, 14.2R3 with Junos Continuity 15.1
MIC-MACSEC-20GE *Gigabit Ethernet MIC with 256b-AES MACSEC*	18.3R1	18.3R1	18.3R1	18.3R1	18.3R1	18.3R1	18.3R1	18.3R1	18.3R1

Table 12: MIC/MPC3 Compatibility

MIC Name	MPC3E	MPC3E NG	MPC3E NG Q
MIC-3D-8OC3-2OC12-ATM ("ATM MIC with SFP" on page 144)	—	14.1R4, 14.2R3 with Junos Continuity 15.1	14.1R4, 14.2R3 with Junos Continuity 15.1

Copyright © 2019, Juniper Networks, Inc.

Table 12: MIC/MPC3 Compatibility (continued)

MIC Name	MPC3E	MPC3E NG	MPC3E NG Q
MIC-3D-20GE-SFP (“Gigabit Ethernet MIC with SFP” on page 151)	12.1	14.1R4, 14.2R3 with Junos Continuity 15.1	14.1R4, 14.2R3 with Junos Continuity 15.1
MIC-3D-20GE-SFP-E (“Gigabit Ethernet MIC with SFP (E)” on page 154)	13.2R2	14.1R4, 14.2R3 with Junos Continuity 15.1	14.1R4, 14.2R3 with Junos Continuity 15.1
MIC3-3D-1X100GE-CFP (“100-Gigabit Ethernet MIC with CFP” on page 168)	12.1	14.1R4, 14.2R3 with Junos Continuity 15.1	14.1R4, 14.2R3 with Junos Continuity 15.1
MIC-3D-2XGE-XFP (“10-Gigabit Ethernet MICs with XFP” on page 159)	12.2	14.1R4, 14.2R3 with Junos Continuity 15.1	14.1R4, 14.2R3 with Junos Continuity 15.1
MIC-3D-4XGE-XFP (“10-Gigabit Ethernet MICs with XFP” on page 159)	—	14.1R4, 14.2R3 with Junos Continuity 15.1	14.1R4, 14.2R3 with Junos Continuity 15.1
MIC3-3D-10XGE-SFPP (“10-Gigabit Ethernet MIC with SFP+ (10 Ports)” on page 162)	12.3	14.1R4, 14.2 R3 and Junos Continuity 15.1	14.1R4, 14.2R3 with Junos Continuity 15.1
MIC3-3D-2X40GE-QSFPP (“40-Gigabit Ethernet MIC with QSFP+” on page 167)	12.2	14.1R4, 14.2R3 with Junos Continuity 15.1	14.1R4, 14.2R3 with Junos Continuity 15.1
MIC3-3D-1X100GE-CXP (“100-Gigabit Ethernet MIC with CXP” on page 170)	12.2	14.1R4, 14.2R3 with Junos Continuity 15.1	14.1R4, 14.2R3 with Junos Continuity 15.1
MIC3-100G-DWDM (“100-Gigabit DWDM OTN MIC with CFP2-ACO” on page 174)	15.1F5 15.1F6 17.1R1	15.1F5 15.1F6 17.1R1	15.1F5 15.1F6 17.1R1
MIC-3D-4OC3OC12-1OC48 MIC-3D-8OC3OC12-4OC48 (“SONET/SDH OC3/STM1 (Multi-Rate) MICs with SFP” on page 206)	13.3	14.1R4, 14.2R3 with Junos Continuity 15.1	14.1R4, 14.2R3 with Junos Continuity 15.1

Copyright © 2019, Juniper Networks, Inc.

Table 12: MIC/MPC3 Compatibility (continued)

MIC Name	MPC3E	MPC3E NG	MPC3E NG Q
MIC-3D-1OC192-XFP (“SONET/SDH OC192/STM64 MIC with XFP” on page 215)	13.3	14.1R4, 14.2R3 with Junos Continuity 15.1	14.1R4, 14.2R3 with Junos Continuity 15.1
MIC-3D-4COC3-1COC12-CE (“Channelized OC3/STM1 (Multi-Rate) Circuit Emulation MIC with SFP” on page 188)	—	—	14.1R4, 14.2R3 with Junos Continuity 15.1
MIC-3D-16CHE1-T1-CE (“Channelized E1/T1 Circuit Emulation MIC” on page 193)	—	15.1 with flexible queuing option	15.1
MS-MIC-16G (“Multiservices MIC” on page 205) NOTE: On MPC3E, the installation of the Multiservices MIC (MS-MIC-16G) with MIC3-3D-2X40GE-QSFPP, MIC3-3D-10XGE-SFPP, or MIC3-3D-1X100GE-CFP does not meet the NEBS criteria. NOTE: Only one MS-MIC-16G can be installed into any MPC.	13.2R2	14.1R4, 14.2R3 with Junos Continuity 15.1	14.1R4, 14.2R3 with Junos Continuity 15.1
MIC-3D-40GE-TX “Tri-Rate MIC” on page 199	—	14.1R4, 14.2R3 with Junos Continuity 15.1	14.1R4, 14.2R3 with Junos Continuity 15.1
MIC-3D-4OC3OC12-1OC48, MIC-3D-8OC3OC12-4OC48 “SONET/SDH OC3/STM1 (Multi-Rate) MICs with SFP” on page 206	12.1	14.1R4, 14.2R3 with Junos Continuity 15.1	14.1R4, 14.2R3 with Junos Continuity 15.1
MIC-3D-4CHOC3-2CHOC12, MIC-3D-8CHOC3-4CHOC12 MIC-4COC3-2COC12-G, MIC-8COC3-4COC12-G “Channelized SONET/SDH OC3/STM1 (Multi-Rate) MICs with SFP” on page 183	—	15.1 with flexible queuing option	14.1R4, 14.2R3 with Junos Continuity 15.1
MIC-3D-8DS3-E3, MIC-3D-8CHDS3-E3-B “DS3/E3 MIC” on page 147 NOTE: You cannot run Channelized DS3 (MIC-3D-8CHDS3-E3) on non-Q MPCs. Channelized DS3 is supported only on Q and EQ-based MPCs.	12.1	14.1R4, 14.2R3 with Junos Continuity 15.1	14.1R4, 14.2R3 with Junos Continuity 15.1
MIC-MACSEC-20GE *Gigabit Ethernet MIC with 256b-AES MACSEC*	18.3R1	18.3R1	18.3R1

Copyright © 2019, Juniper Networks, Inc.

Table 13: MIC/MPC6 Compatibility

MIC Name	MPC6E
MIC6-10G "10-Gigabit Ethernet MIC with SFP+ (24 Ports)" on page 164	13.3R2
MIC6-10G-OTN "10-Gigabit Ethernet OTN MIC with SFP+ (24 Ports)" on page 165	13.3R3
MIC6-100G-CXP "100-Gigabit Ethernet MIC with CXP (4 Ports)" on page 171	13.3R2
MIC6-100G-CFP2 "100-Gigabit Ethernet MIC with CFP2" on page 172	13.3R3

Table 14: MIC/MPC8 Compatibility

MIC Name	MPC8E
MIC-MRATE "MIC MRATE" on page 203	• 15.1F5 with Junos Continuity • 16.1R1
MIC-MACSEC-MRATE "Multi-Rate Ethernet MIC" on page 210	17.4

Table 15: MIC/MPC9 Compatibility

MIC Name	MPC9E
MIC-MRATE "MIC MRATE" on page 203	• 15.1F5 with Junos Continuity • 16.1R1
MIC-MACSEC-MRATE "Multi-Rate Ethernet MIC" on page 210	17.4

Table 16: MIC/MPC10003 Compatibility

MIC Name	MPC10003
JNP-MIC1 "Multi-Rate Ethernet MIC" on page 210	17.3
JNP-MIC1-MACSEC "Multi-Rate Ethernet MIC" on page 210	17.3R2

Copyright © 2019, Juniper Networks, Inc.

Related Documentation

- MICs Supported by MX Series Routers on page 18
- *Junos Continuity Software User Guide (Junos OS Release 14.1R4 and Later Releases)*

Copyright © 2019, Juniper Networks, Inc.

CHAPTER 5

FPCs and PICs Supported on MX Series Routers

- MX Series FPC and PIC Overview on page 35
- High Availability Features on page 36
- FPCs Supported by MX240, MX480, and MX960 Routers on page 36
- PICs Supported by MX240, MX480, and MX960 Routers on page 37

MX Series FPC and PIC Overview

Flexible PIC Concentrators (FPCs) and Physical Interface Cards (PICs) function similarly to MICs and MPCs. PICs provide physical interfaces for the router and install into FPCs which provide packet forwarding services. Each FPC supports up to two Physical Interface Cards (PICs). You can install PICs of different media types on the same router as long as the router supports those PICs.

PICs receive incoming packets from the network and transmit outgoing packets to the network. During this process, each PIC performs framing and high-speed signaling for its media type. Before transmitting outgoing data packets, the PICs encapsulate the packets received. Each PIC is equipped with a media-specific ASIC that performs control functions tailored to the PIC's media type.

An FPC occupies two Dense Port Concentrator (DPC) slots on an MX Series router. FPCs install vertically in the MX960 router chassis, and horizontally in the MX480 and MX240 router chassis. The maximum number of supported FPCs varies per router:

- MX960 router—6 FPCs
- MX480 router—3 FPCs
- MX240 router—1 FPC

MX240, MX480, and MX960 routers support 2 PICs per FPC. The maximum number of supported PICs varies per router:

- MX960 router—12 PICs
- MX480 router—6 PICs
- MX240 router—2 PICs

Copyright © 2019, Juniper Networks, Inc.

Blank PICs resemble other PICs but do not provide any physical connection or activity. When a slot is not occupied by a PIC, you must insert a blank PIC to fill the empty slot and ensure proper cooling of the system.

Related Documentation

- High Availability Features on page 36
- FPCs Supported by MX240, MX480, and MX960 Routers on page 36
- PICs Supported by MX240, MX480, and MX960 Routers on page 37

High Availability Features

High availability features include Routing Engine redundancy, graceful Routing Engine switchover (GRES), nonstop bridging, nonstop active routing, graceful restart for routing protocols, Virtual Router Redundancy Protocol (VRRP), and unified in-service software upgrade (ISSU). Some high availability features are not supported by all platforms and all PICs. For more information, see the*Unified ISSU System Requirements* in the *High Availability Feature Guide*.

Related Documentation

- MX Series FPC and PIC Overview on page 35
- FPCs Supported by MX240, MX480, and MX960 Routers on page 36
- PICs Supported by MX240, MX480, and MX960 Routers on page 37

FPCs Supported by MX240, MX480, and MX960 Routers

An FPC occupies two slots when installed in an MX240, MX480, or MX960 router. The maximum number of supported FPCs varies per router:

- MX960 router—6 FPCs
- MX480 router—3 FPCs
- MX240 router—1 FPC

Table 17 on page 36 lists FPCs supported by MX240 routers.

Table 17: FPCs Supported by MX Series Routers

FPC Type	FPC Name	FPC Model Number	Maximum Number of PICs Supported	Maximum Throughput per FPC (Full-duplex)	First Junos OS Release
3	FPC3	MX-FPC3	2	20 Gbps	9.4
2	FPC2	MX-FPC2	2	10 Gbps	9.5

Related Documentation

- MX Series FPC and PIC Overview on page 35
- PICs Supported by MX240, MX480, and MX960 Routers on page 37

 Copyright © 2019, Juniper Networks, Inc.

- High Availability Features on page 36

PICs Supported by MX240, MX480, and MX960 Routers

Table 18 on page 37 lists the PICs supported by MX240, MX480, and MX960 routers.

Table 18: PICs Supported by MX240, MX480, and MX960 Routers

PIC Name	PIC Model Number	Ports	Type	First Junos OS Release
Channelized IQ PICs				
"Channelized OC12/STM4 Enhanced IQ (IQE) PIC with SFP" on page 219	PB-4CHOC12-STM4-IQE-SFP	4	2	9.5
"Channelized OC48/STM16 Enhanced IQ (IQE) PIC with SFP" on page 220	PB-1CHOC48-STM16-IQE	1	2	9.5
SONET/SDH PICs				
"SONET/SDH OC3/STM1 (Multi-Rate) PIC with SFP" on page 226	PB-4OC3-1OC12-SON2-SFP	4	2	9.5
"SONET/SDH OC12/STM4 (Multi-Rate) PIC with SFP" on page 229	PB-4OC3-4OC12-SON-SFP	4	2	9.5
"SONET/SDH OC48/STM16 Enhanced IQ (IQE) PIC with SFP" on page 232	PC-4OC48-STM16-IQE-SFP	4	3	10.4R2
"SONET/SDH OC48/STM16 (Multi-Rate) PIC with SFP" on page 236	PB-1OC48-SON-B-SFP	1	2	9.5
"SONET/SDH OC48/STM16 PIC with SFP" on page 239	PC-4OC48-SON-SFP	4	3	9.4
"SONET/SDH OC192c/STM64 PIC" on page 242	PC-1OC192-SON-VSR	1	3	9.4
"SONET/SDH OC192c/STM64 PIC with XFP" on page 245	PC-1OC192-SON-XFP	1	3	9.4

Related Documentation

- MX Series FPC and PIC Overview on page 35
- FPCs Supported by MX240, MX480, and MX960 Routers on page 36
- High Availability Features on page 36

Copyright © 2019, Juniper Networks, Inc.

Copyright © 2019, Juniper Networks, Inc.

CHAPTER 6

Network Interface Specifications

- Determining Transceiver Support and Specifications on page 39
- Cable and Connector Specifications for MX and PTX Series Devices on page 40

Determining Transceiver Support and Specifications

You can find information about the pluggable transceivers supported on your Juniper Networks device by using the Hardware Compatibility Tool. In addition to transceiver and connector type, the optical and cable characteristics—where applicable—are documented for each transceiver. The Hardware Compatibility Tool allows you to search by product, displaying all the transceivers supported on that device, or category, displaying all the transceivers by interface speed or type. The Hardware Compatibility Tool is located at https://apps.juniper.net/hct/.

Some transceivers support additional monitoring using the operational mode CLI command **show interfaces diagnostics optics**. Use the Hardware Compatibility Tool to determine if your transceiver supports monitoring. See the Junos OS documentation for your device for a description of the monitoring fields.

CAUTION: If you face a problem running a Juniper Networks device that uses a third-party optic or cable, the Juniper Networks Technical Assistance Center (JTAC) can help you diagnose the source of the problem. Your JTAC engineer might recommend that you check the third-party optic or cable and potentially replace it with an equivalent Juniper Networks optic or cable that is qualified for the device.

Related Documentation

- *show interfaces diagnostics optics (Gigabit Ethernet, 10-Gigabit Ethernet, 40-Gigabit Ethernet, 100-Gigabit Ethernet, and Virtual Chassis Port)*
- *show interfaces diagnostics optics (SONET)*
- *show interfaces diagnostics optics*
- *show interfaces diagnostics optics*
- *show interfaces diagnostics optics*

Cable and Connector Specifications for MX and PTX Series Devices

The transceivers that are supported on MX Series and PTX Series devices use fiber-optic cables and connectors. The type of connector and the type of fiber depends on the transceiver type.

You can determine the type of cable and connector required for your specific transceiver by using the Hardware Compatibility Tool.

CAUTION: **To maintain agency approvals, use only a properly constructed, shielded cable.**

NOTE: **The terms multifiber push-on (MPO) and multifiber termination push-on (MTP) describe the same connector type. The rest of this topic uses MPO to mean MPO or MTP.**

- 12-Fiber MPO Connectors on page 40
- 24-Fiber MPO Connectors on page 44
- LC Duplex Connectors on page 44

12-Fiber MPO Connectors

There are two types of cables used with 12-fiber MPO connectors on Juniper Networks devices—patch cables with MPO connectors on both ends, and breakout cables with an MPO connector on one end and four LC duplex connectors on the opposite end. Depending on the application, the cables might use single-mode fiber (SMF) or multimode fiber (MMF). Juniper Networks sells cables that meet the supported transceiver requirements, but it is not required to purchase cables from Juniper Networks.

Ensure that you order cables with the correct polarity. Vendors refer to these crossover cables as *key up to key up*, *latch up to latch up*, *Type B*, or *Method B*. If you are using patch panels between two transceivers, ensure that the proper polarity is maintained through the cable plant.

Also, ensure that the fiber end in the connector is finished correctly. Physical contact (PC) refers to fiber that has been polished flat. Angled physical contact (APC) refers to fiber that has been polished at an angle. Ultra physical contact (UPC) refers to fiber that has been polished flat, to a finer finish. The required fiber end is listed with the connector type in the Hardware Compatibility Tool.

12-Fiber Ribbon Patch Cables with MPO Connectors

You can use 12-fiber ribbon patch cables with female MPO connectors to connect two transceivers of the same type—for example, 40GBASE-SR4-to-40GBASESR4 or 100GBASE-SR4-to-100GBASE-SR4. You can also connect 4x10GBASE-LR or 4x10GBASE-SR transceivers by using patch cables—for example,

Copyright © 2019, Juniper Networks, Inc.

4x10GBASE-LR-to-4x10GBASE-LR or 4x10GBASE-SR-to-4x10GBASE-SR—instead of breaking the signal out into four separate signals.

Table 19 on page 41 describes the signals on each fiber. Table 20 on page 41 shows the pin-to-pin connections for proper polarity.

Table 19: Cable Signals for 12-Fiber Ribbon Patch Cables

Fiber	Signal
1	Tx0 (Transmit)
2	Tx1 (Transmit)
3	Tx2 (Transmit)
4	Tx3 (Transmit)
5	Unused
6	Unused
7	Unused
8	Unused
9	Rx3 (Receive)
10	Rx2 (Receive)
11	Rx1 (Receive)
12	Rx0 (Receive)

Table 20: Cable Pinouts for 12-Fiber Ribbon Patch Cables

MPO Pin	MPO Pin
1	12
2	11
3	10
4	9
5	8
6	7

Copyright © 2019, Juniper Networks, Inc.

Table 20: Cable Pinouts for 12-Fiber Ribbon Patch Cables (continued)

MPO Pin	MPO Pin
7	6
8	5
9	4
10	3
11	2
12	1

12-Fiber Ribbon Breakout Cables with MPO-to-LC Duplex Connectors

You can use 12-ribbon breakout cables with MPO-to-LC duplex connectors to connect a QSFP+ transceiver to four separate SFP+ transceivers—for example, 4x10GBASE-LR-to-10GBASE-LR or 4x10GBASE-SR-to-10GBASE-SR SFP+ transceivers. The breakout cable is constructed out of a 12-fiber ribbon fiber-optic cable. The ribbon cable splits from a single cable with a female MPO connector on one end, into four cable pairs with four LC duplex connectors on the opposite end.

Table 21 on page 42 describes the way the fibers are connected between the MPO and LC duplex connectors. The cable signals are the same as those described in Table 19 on page 41.

Table 21: Cable Pinouts for 12-Fiber Ribbon Breakout Cables

MPO Connector Pin	LC Duplex Connector Pin
1	Tx on LC Duplex 1
2	Tx on LC Duplex 2
3	Tx on LC Duplex 3
4	Tx on LC Duplex 4
5	Unused
6	Unused
7	Unused
8	Unused
9	Rx on LC Duplex 4

Copyright © 2019, Juniper Networks, Inc.

Table 21: Cable Pinouts for 12-Fiber Ribbon Breakout Cables (continued)

MPO Connector Pin	LC Duplex Connector Pin
10	Rx on LC Duplex 3
11	Rx on LC Duplex 2
12	Rx on LC Duplex 1

12-Ribbon Patch and Breakout Cables Available from Juniper Networks

Juniper Networks sells 12-ribbon patch and breakout cables with MPO connectors that meet the requirements described above. It is not required to purchase cables from Juniper Networks. Table 22 on page 43 describes the available cables.

Table 22: 12-Ribbon Patch and Breakout Cables Available from Juniper Networks

Cable Type	Connector Type	Fiber Type	Cable Length	Juniper Model Number
12-ribbon patch	Female MPO/PC to female MPO/PC, key up to key up	MMF (OM3)	1 m	MTP12-FF-M1M
			3 m	MTP12-FF-M3M
			5 m	MTP12-FF-M5M
			10 m	MTP12-FF-M10M
	Female MPO/APC to female MPO/APC, key up to key up	SMF	1 m	MTP12-FF-S1M
			3 m	MTP12-FF-S3M
			5 m	MTP12-FF-S5M
			10 m	MTP12-FF-S10M
12-ribbon breakout	Female MPO/PC, key up, to four LC/UPC duplex	MMF (OM3)	1 m	MTP-4LC-M1M
			3 m	MTP-4LC-M3M
			5 m	MTP-4LC-M5M
			10 m	MTP-4LC-M10M
	Female MPO/APC, key up, to four LC/UPC duplex	SMF	1 m	MTP-4LC-S1M
			3 m	MTP-4LC-S3M
			5 m	MTP-4LC-S5M
			10 m	MTP-4LC-S10M

Copyright © 2019, Juniper Networks, Inc.

24-Fiber MPO Connectors

You can use patch cables with 24-fiber MPO connectors to connect two supported transceivers of the same type—for example, 100GBASE-SR10-to-100GBASE-SR10.

Figure 1 on page 44 shows the 24-fiber MPO optical lane assignments.

Figure 1: 24-Fiber MPO Optical Lane Assignments

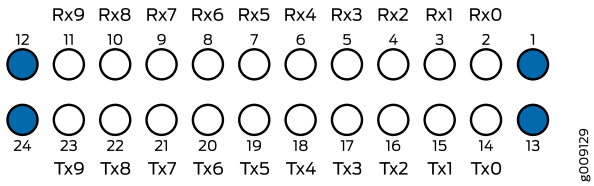

NOTE: **Ensure that you order cables with the correct polarity. Vendors refer to these crossover cables as *key up to key up*, *latch up to latch up*, *Type B*, or *Method B*. If you are using patch panels between two transceivers, ensure that the proper polarity is maintained through the cable plant.**

The MPO optical connector for the CFP2-100G-SR10-D3 is defined in *Section 5.6 of the CFP2 Hardware Specification and Section 88.10.3 of IEEE STD 802.3-2012*. These specifications include the following requirements:

- Recommended Option A in IEEE STD 802.3-2012.
- The transceiver receptacle is male. A patch cable with female connector is required to mate with the module.
- Ferrule finish shall be flat polished interface that is compliant with IEC 61754-7.
- Alignment key is key up.

The optical interface must meet the requirement FT-1435-CORE in *Generic Requirements for Multi-Fiber Optical Connectors*. The module must pass the wiggle test defined by IEC 62150-3.

LC Duplex Connectors

You can use patch cables with LC duplex connectors to connect two supported transceivers of the same type—for example, 40GBASE-LR4-to-40GBASE-LR4 or 100GBASE-LR4-to100GBASE-LR4. The patch cable is one fiber pair with two LC duplex connectors at opposite ends. LC duplex connectors are also used with 12-fiber ribbon breakout cables, as described in "12-Fiber Ribbon Breakout Cables with MPO-to-LC Duplex Connectors" on page 42.

Figure 2 on page 45 shows an LC duplex connector being installed in a transceiver.

Copyright © 2019, Juniper Networks, Inc.

Figure 2: LC Duplex Connector

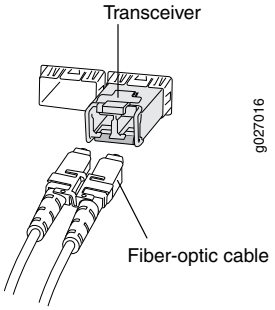

Copyright © 2019, Juniper Networks, Inc.

PART 2

DPC, MPC, MIC, and PIC Descriptions

- MX Series DPC Descriptions on page 49
- MX Series MPC Descriptions on page 83
- MX Series MIC Descriptions on page 143
- MX Series PIC Descriptions on page 219

Copyright © 2019, Juniper Networks, Inc.

CHAPTER 7

MX Series DPC Descriptions

- Gigabit Ethernet DPC with SFP on page 50
- Gigabit Ethernet Enhanced DPC with SFP on page 52
- Gigabit Ethernet Enhanced Ethernet Services DPC with SFP on page 54
- Gigabit Ethernet Enhanced Queuing Ethernet Services DPC with SFP on page 56
- Gigabit Ethernet Enhanced Queuing IP Services DPCs with SFP on page 58
- 10-Gigabit Ethernet DPC with XFP on page 61
- 10-Gigabit Ethernet Enhanced DPCs with XFP on page 63
- 10-Gigabit Ethernet Enhanced Ethernet Services DPC with XFP on page 65
- 10-Gigabit Ethernet Enhanced Queuing Ethernet Services DPC with XFP on page 67
- 10-Gigabit Ethernet Enhanced Queuing IP Services DPC with XFP on page 69
- Multi-Rate Ethernet Enhanced DPC with SFP and XFP on page 71
- Multi-Rate Ethernet Enhanced Ethernet Services DPC with SFP and XFP on page 73
- Multi-Rate Ethernet Enhanced Queuing IP Services DPC with SFP and XFP on page 75
- Multiservices DPC on page 77
- Tri-Rate Enhanced DPC on page 79
- Tri-Rate Enhanced Ethernet Services DPC on page 81

Copyright © 2019, Juniper Networks, Inc.

Gigabit Ethernet DPC with SFP

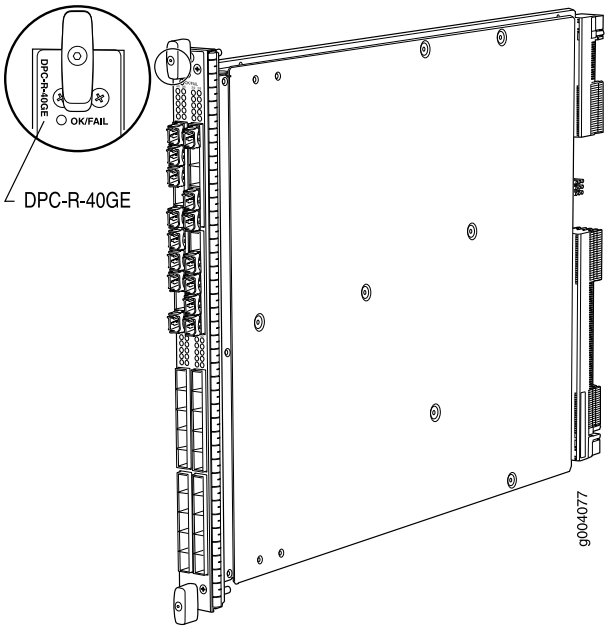

Software release	• Junos OS Release 8.2 and later • End-of-life (see notification PSN-2009-06-400)
Description	• 40 Gigabit Ethernet ports • Power requirement: 6.98 A @ 48 V (335 W) • Weight: 13.1 lb (5.9 kg) • Supports large Ethernet frame sizes for more efficient throughput across the intra-POP network • Model number: DPC-R-40GE-SFP • Name in the CLI: **DPC 40x 1GE R**
Hardware features	• High-performance throughput on each port at speeds up to 1 Gbps • Autonegotiation between Gigabit Ethernet circuit partners • Full-duplex mode • Maximum transmission units (MTUs) of up to 9192 bytes
Software features	• Optical diagnostics and related alarms • See "Protocols and Applications Supported by DPCs and Enhanced DPCs (DPC and DPCE-R)" on page 251 for information about the protocols and applications that this DPC supports.
Interfaces	Syntax: ge-*fpc/pic/port* where: • fpc: Slot in the router where the DPC is installed • pic: 0 (bottom left row of 10 ports), 1 (bottom right row of 10 ports), 2 (top left row of 10 ports), or 3 (top right row of 10 ports) • port: 0 through 9 For example, ge-1/3/0 is the interface for port 0 in the top right row of 10 ports on a DPC installed in slot 1.

Copyright © 2019, Juniper Networks, Inc.

Cables and connectors	TIP: You can use the Hardware Compatibility Tool to find information about the pluggable transceivers supported on your Juniper Networks device. The list of supported transceivers for the MX Series is located at https://pathfinder.juniper.net/hct/category/#catKey=100001&modelType;=All&pf;=MX+Series. You can install any transceiver supported by the DPC. For information about installing and removing transceivers, see the hardware guide for your router. NOTE: Do not install Gigabit Ethernet SFPs in the SONET/SDH port. The port will not recognize the SFP.
LEDs	**OK/FAIL** LED, one bicolor: • Steady green—DPC is functioning normally. • Blinking green—DPC is transitioning online or offline. • Red—DPC has failed. Link LED, one green per port: • Off—No link. • On steadily—Link is active. The Link LEDs are labeled in groups of five: • **0/0** for **0/0** through **0/4** • **0/5** for **0/5** through **0/9** • **1/0** for **1/0** through **1/4** • **1/5** for **1/5** through **1/9** • **2/0** for **2/0** through **2/4** • **2/5** for **2/5** through **2/9** • **3/0** for **3/0** through **3/4** • **3/5** for **3/5** through **3/9**

Related Documentation

- MX Series DPC Overview on page 7
- DPCs Supported on MX240, MX480, and MX960 Routers on page 8

Gigabit Ethernet Enhanced DPC with SFP

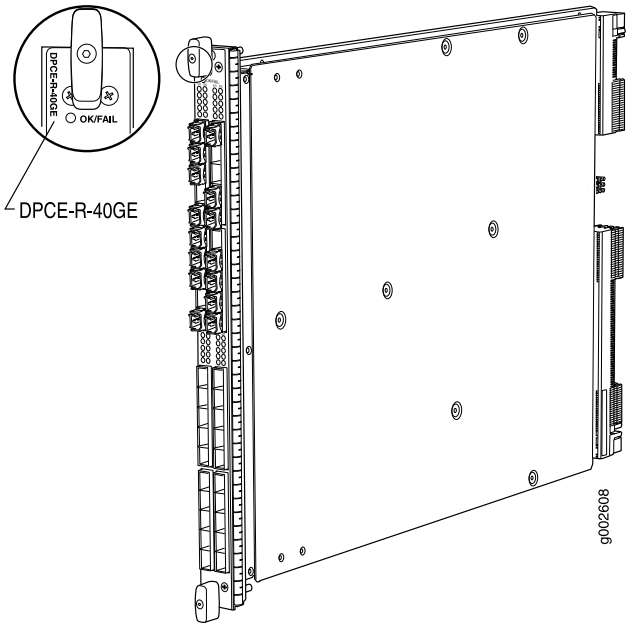

Software release	• Junos OS Release 8.4 and later
Description	• 40 Gigabit Ethernet ports • Power requirement: 6.98 A @ 48 V (335 W) • Weight: 13.1 lb (5.9 kg) • Supports large Ethernet frame sizes for more efficient throughput across the intra-POP network • Model number: DPCE-R-40GE-SFP • Name in the CLI: DPCE 40x 1GE R
Hardware features	• High-performance throughput on each port at speeds up to 1 Gbps • Autonegotiation between Gigabit Ethernet circuit partners • Full-duplex mode • Maximum transmission units (MTUs) of up to 9192 bytes • Enhanced ASICs for increased performance and scalability of Layer 2 features
Software features	• Optical diagnostics and related alarms • See "Protocols and Applications Supported by DPCs and Enhanced DPCs (DPC and DPCE-R)" on page 251 for information about the protocols and applications that this DPC supports.

Copyright © 2019, Juniper Networks, Inc.

Interfaces	Syntax: ge-*fpc/pic/port* where: • fpc: Slot in the router where the DPC is installed • pic: 0 (bottom left row of 10 ports), 1 (bottom right row of 10 ports), 2 (top left row of 10 ports), or 3 (top right row of 10 ports) when installed horizontally • port: 0 through 9 For example, ge-1/3/0 is the interface for port 0 in the top right row of 10 ports on a DPC installed in slot 1. For information on the interface numbering, see the *DPC Port and Interface Numbering* topic for the respective MX router.
Cables and connectors	TIP: You can use the Hardware Compatibility Tool to find information about the pluggable transceivers supported on your Juniper Networks device. The list of supported transceivers for the MX Series is located at https://pathfinder.juniper.net/hct/category/#catKey=100001&modelType;=All&pf;=MX+Series. You can install any transceiver supported by the DPC. For information about installing and removing transceivers, see the hardware guide for your router. NOTE: Do not install Gigabit Ethernet SFPs in the SONET/SDH port. The port will not recognize the SFP.
LEDs	**OK/FAIL** LED, one bicolor: • Steady green—DPC is functioning normally. • Blinking green—DPC is transitioning online or offline. • Red—DPC has failed. Link LED, one green per port: • Off—No link. • On steadily—Link is active. The Link LEDs are labeled in groups of five: • **0/0** for **0/0** through **0/4** • **0/5** for **0/5** through **0/9** • **1/0** for **1/0** through **1/4** • **1/5** for **1/5** through **1/9** • **2/0** for **2/0** through **2/4** • **2/5** for **2/5** through **2/9** • **3/0** for **3/0** through **3/4** • **3/5** for **3/5** through **3/9**

Related Documentation

- MX Series DPC Overview on page 7
- DPCs Supported on MX240, MX480, and MX960 Routers on page 8

Gigabit Ethernet Enhanced Ethernet Services DPC with SFP

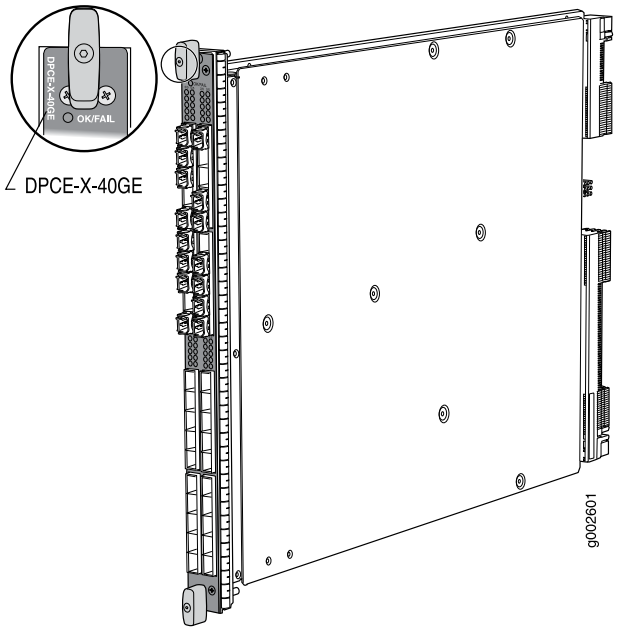

Software release	• Junos OS Release 8.4 and later
Description	• 40 Gigabit Ethernet ports • Power requirement: 6.98 A @ 48 V (335 W) • Weight: 13.1 lb (5.9 kg) • Supports large Ethernet frame sizes for more efficient throughput across the intra-POP network • Model number: DPCE-X-40GE-SFP • Name in the CLI: DPCE 40x 1GE X
Hardware features	• High-performance throughput on each port at speeds up to 1 Gbps • Autonegotiation between Gigabit Ethernet circuit partners • Full-duplex mode • Maximum transmission units (MTUs) of up to 9192 bytes • Enhanced ASICs for increased performance and scalability of Layer 2 features
Software features	• Optical diagnostics and related alarms • See "Protocols and Applications Supported by Enhanced Ethernet Services DPCs (DPCE-X)" on page 257 for information about the protocols and applications that this DPC supports. NOTE: The routing table is limited to 32,000 IP routes. This limitation applies to any manner in which the routes are learned, such as OSPF, RIP, and so on. The DPC supports BGP for L2 VPNs only.

Copyright © 2019, Juniper Networks, Inc.

Interfaces	Syntax: ge-*fpc/pic/port* where: • fpc: Slot in the router where the DPC is installed • pic: 0 (bottom left row of 10 ports), 1 (bottom right row of 10 ports), 2 (top left row of 10 ports), or 3 (top right row of 10 ports) • port: 0 through 9 For example, ge-1/3/0 is the interface for port 0 in the top right row of 10 ports on a DPC installed in slot 1.
Cables and connectors	TIP: You can use the Hardware Compatibility Tool to find information about the pluggable transceivers supported on your Juniper Networks device. The list of supported transceivers for the MX Series is located at https://pathfinder.juniper.net/hct/category/#catKey=100001&modelType;=All&pf;=MX+Series. You can install any transceiver supported by the DPC. For information about installing and removing transceivers, see the hardware guide for your router. NOTE: Do not install Gigabit Ethernet SFPs in the SONET/SDH port. The port will not recognize the SFP.
LEDs	**OK/FAIL** LED, one bicolor: • Steady green—DPC is functioning normally. • Blinking green—DPC is transitioning online or offline. • Red—DPC has failed. Link LED, one green per port: • Off—No link. • On steadily—Link is active. The Link LEDs are labeled in groups of five: • **0/0** for **0/0** through **0/4** • **0/5** for **0/5** through **0/9** • **1/0** for **1/0** through **1/4** • **1/5** for **1/5** through **1/9** • **2/0** for **2/0** through **2/4** • **2/5** for **2/5** through **2/9** • **3/0** for **3/0** through **3/4** • **3/5** for **3/5** through **3/9**

Related Documentation

- MX Series DPC Overview on page 7
- DPCs Supported on MX240, MX480, and MX960 Routers on page 8

Gigabit Ethernet Enhanced Queuing Ethernet Services DPC with SFP

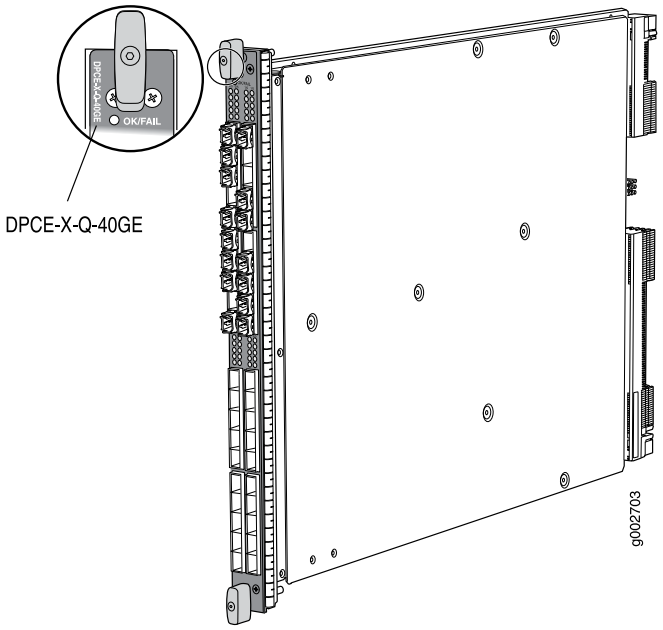

Software release	• Junos OS Release 8.5 and later
Description	• 40 Gigabit Ethernet ports • Power requirement: 7.6 A @ 48 V (365 W) • Weight: 13.1 lb (5.9 kg) • Supports large Ethernet frame sizes for more efficient throughput across the intra-POP network • Model number: DPCE-X-Q-40GE-SFP • Name in the CLI: DPCE 40x 1GE X EQ
Hardware features	• High-performance throughput on each port at speeds up to 1 Gbps • Autonegotiation between Gigabit Ethernet circuit partners • Full-duplex mode • Maximum transmission units (MTUs) of up to 9192 bytes • Enhanced ASICs for increased performance and scalability of Layer 2 features
Software features	• Optical diagnostics and related alarms • See "Protocols and Applications Supported by Enhanced Queuing Ethernet Services DPCs (DPCE-X-Q)" on page 266 for information about the protocols and applications that this DPC supports. NOTE: The routing table is limited to 32,000 IP routes. This limitation applies to any manner in which the routes are learned, such as OSPF, RIP, and so on. The DPC supports BGP for L2 VPNs only.

Copyright © 2019, Juniper Networks, Inc.

Interfaces	Syntax: ge-*fpc/pic/port* where: • fpc: Slot in the router where the DPC is installed • pic: 0 (bottom left row of 10 ports), 1 (bottom right row of 10 ports), 2 (top left row of 10 ports), or 3 (top right row of 10 ports) • port: 0 through 9 For example, ge-1/3/0 is the interface for port 0 in the top right row of 10 ports on a DPC installed in slot 1.
Cables and connectors	TIP: You can use the Hardware Compatibility Tool to find information about the pluggable transceivers supported on your Juniper Networks device. The list of supported transceivers for the MX Series is located at https://pathfinder.juniper.net/hct/category/#catKey=100001&modelType;=All&pf;=MX+Series. You can install any transceiver supported by the DPC. For information about installing and removing transceivers, see the hardware guide for your router. NOTE: Do not install Gigabit Ethernet SFPs in the SONET/SDH port. The port will not recognize the SFP.
LEDs	**OK/FAIL** LED, one bicolor: • Steady green—DPC is functioning normally. • Blinking green—DPC is transitioning online or offline. • Red—DPC has failed. Link LED, one green per port: • Off—No link. • On steadily—Link is active. The Link LEDs are labeled in groups of five: • **0/0** for **0/0** through **0/4** • **0/5** for **0/5** through **0/9** • **1/0** for **1/0** through **1/4** • **1/5** for **1/5** through **1/9** • **2/0** for **2/0** through **2/4** • **2/5** for **2/5** through **2/9** • **3/0** for **3/0** through **3/4** • **3/5** for **3/5** through **3/9**

Related Documentation

- MX Series DPC Overview on page 7
- DPCs Supported on MX240, MX480, and MX960 Routers on page 8

Gigabit Ethernet Enhanced Queuing IP Services DPCs with SFP

Figure 3: 20-Port Gigabit Ethernet Enhanced Queuing IP Services DPC with SFP

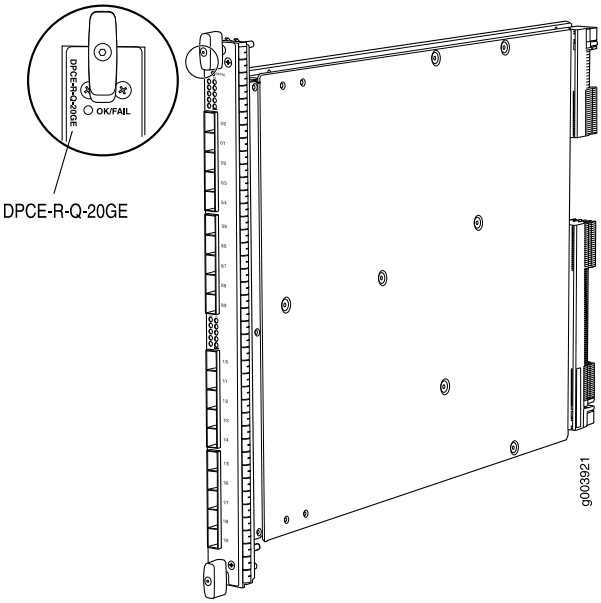

Figure 4: 40-Port Gigabit Ethernet Enhanced Queuing IP Services DPC with SFP

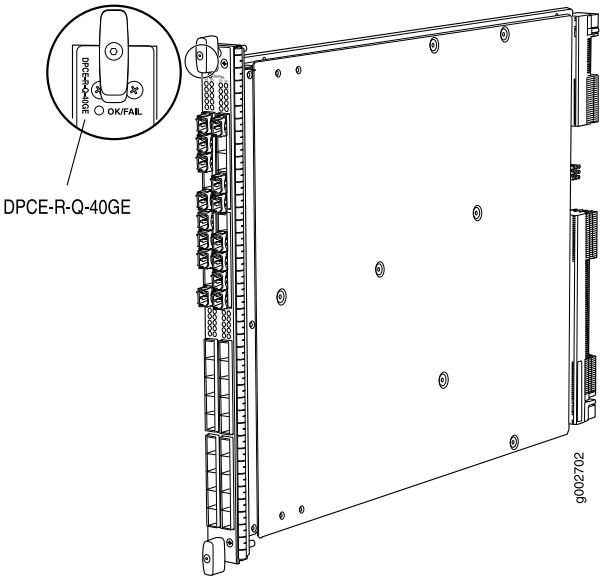

Software release	• 20-port: Junos OS Release 9.1 and later • 40-port: Junos OS Release 8.5 and later End-of-life (see notification PSN-2011-07-314)
Description	20-port: • 20 Gigabit Ethernet ports • Power requirement: 4.2 A @ 48 V (200 W) • Weight: 13 lb (5.9 kg) • Model number: DPCE-R-Q-20GE-SFP • Name in the CLI: DPCE 20x 1GE R EQ 40-port: • 40 Gigabit Ethernet ports • Power requirement: 7.6 A @ 48 V (365 W) • Weight: 13.1 lb (5.9 kg) • Model number: DPCE-R-Q-40GE-SFP • Name in the CLI: DPCE 40x 1GE R EQ
Hardware features	• High-performance throughput on each port at speeds up to 1 Gbps • Autonegotiation between Gigabit Ethernet circuit partners • Full-duplex mode • Maximum transmission units (MTUs) of up to 9192 bytes • Enhanced ASICs for increased performance and scalability of Layer 2 features

Copyright © 2019, Juniper Networks, Inc.

Software features	• Optical diagnostics and related alarms • See "Protocols and Applications Supported by Enhanced Queuing IP Services DPCs (DPCE-R-Q)" on page 261 for information about the protocols and applications that this DPC supports.

Interfaces	Syntax: ge-*fpc/pic/port* where:
	• fpc: Slot in the router where the DPC is installed
	• pic:
	  • 20-port: 0 (left row of 10 ports), or 1 (right row of 10 ports)
	  • 40-port: 0 (bottom left row of 10 ports), 1 (bottom right row of 10 ports), 2 (top left row of 10 ports), or 3 (top right row of 10 ports)
	• port: 0 through 9
	For example, ge-1/1/0 is the interface for port 0 in the (top for 40-port) right row of 10 ports on a DPC installed in slot 1.

Cables and connectors	TIP: You can use the Hardware Compatibility Tool to find information about the pluggable transceivers supported on your Juniper Networks device. The list of supported transceivers for the MX Series is located at https://pathfinder.juniper.net/hct/category/#catKey=100001&modelType;=All&pf;=MX+Series. You can install any transceiver supported by the DPC. For information about installing and removing transceivers, see the hardware guide for your router. NOTE: Do not install Gigabit Ethernet SFPs in the SONET/SDH port. The port will not recognize the SFP.

LEDs	**OK/FAIL** LED, one bicolor:
	• Steady green—DPC is functioning normally.
	• Blinking green—DPC is transitioning online or offline.
	• Red—DPC has failed.
	Link LED, one green per port:
	• Off—No link.
	• On steadily—Link is active.
	The Link LEDs are labeled in groups of five:
	• 20-port:
	  • **0/0** for **0/0** through **0/4**
	  • **0/5** for **0/5** through **0/9**
	  • **1/0** for **1/0** through **1/4**
	  • **1/5** for **1/5** through **1/9**
	• 40-port:
	  • **0/0** for **0/0** through **0/4**
	  • **0/5** for **0/5** through **0/9**
	  • **1/0** for **1/0** through **1/4**
	  • **1/5** for **1/5** through **1/9**
	  • **2/0** for **2/0** through **2/4**
	  • **2/5** for **2/5** through **2/9**
	  • **3/0** for **3/0** through **3/4**
	  • **3/5** for **3/5** through **3/9**

Copyright © 2019, Juniper Networks, Inc.

Related Documentation

- MX Series DPC Overview on page 7
- DPCs Supported on MX240, MX480, and MX960 Routers on page 8

10-Gigabit Ethernet DPC with XFP

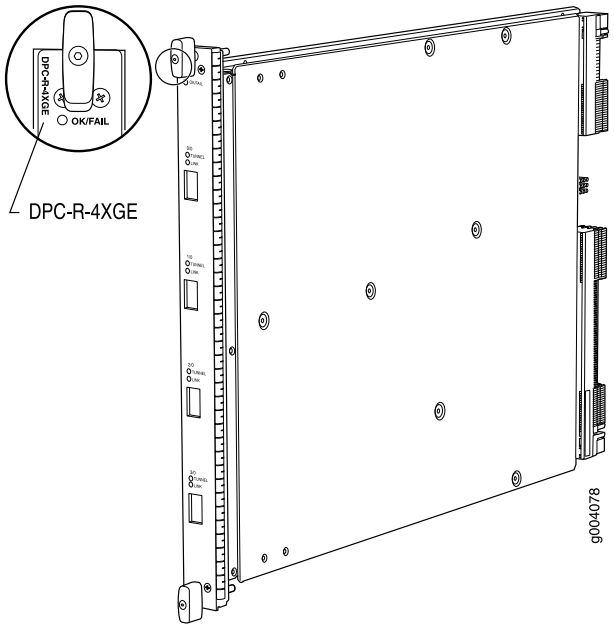

Software release	• Junos OS Release 8.2 and later • End-of-life (see notification PSN-2009-06-400)
Description	• Four 10-Gigabit Ethernet ports • Power requirement: 6.46 A @ 48 V (310 W) • Weight: 13.1 lb (5.9 kg) • Model number: DPC-R-4XGE-XFP • Name in the CLI: DPC 4x 10GE R
Hardware features	• High-performance throughput on each port at speeds up to 10 Gbps • WAN-PHY mode at 9.953 Gbps • LAN-PHY mode at 10.3125 Gbps • Full-duplex mode • Maximum transmission units (MTUs) of up to 9192 bytes
Software features	• Configurable WAN-PHY mode options • See "Protocols and Applications Supported by DPCs and Enhanced DPCs (DPC and DPCE-R)" on page 251 for information about the protocols and applications that this DPC supports.

Interfaces	Syntax: xe-*fpc/pic/port* where: • fpc: Slot in the router where the DPC is installed • pic: 0 through 3 • port: 0 For example, xe-1/3/0 is the interface for the last port on a DPC installed in slot 1.
Cables and connectors	TIP: You can use the Hardware Compatibility Tool to find information about the pluggable transceivers supported on your Juniper Networks device. The list of supported transceivers for the MX Series is located at https://pathfinder.juniper.net/hct/category/#catKey=100001&modelType;=All&pf;=MX+Series. You can install any transceiver supported by the DPC. For information about installing and removing transceivers, see the hardware guide for your router.
LEDs	**OK/FAIL** LED, one bicolor: • Steady green—DPC is functioning normally. • Blinking green—DPC is transitioning online or offline. • Red—DPC has failed. **TUNNEL** LED, one green per port: • Off—Normal operating mode. • On steadily—Port configured in tunnel mode. **LINK** LED, one green per port: • Off—No link. • On steadily—Link is active. The **TUNNEL** and **LINK** LEDs are labeled top to bottom **0/0** through **3/0**.

Related Documentation

- MX Series DPC Overview on page 7
- DPCs Supported on MX240, MX480, and MX960 Routers on page 8

Copyright © 2019, Juniper Networks, Inc.

10-Gigabit Ethernet Enhanced DPCs with XFP

Figure 5: 2-Port 10-Gigabit Ethernet Enhanced DPC with XFP

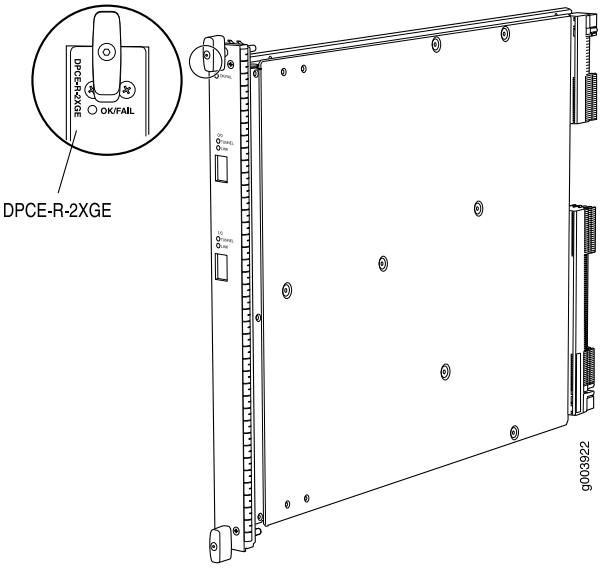

Figure 6: 4-Port 10-Gigabit Ethernet Enhanced DPC with XFP

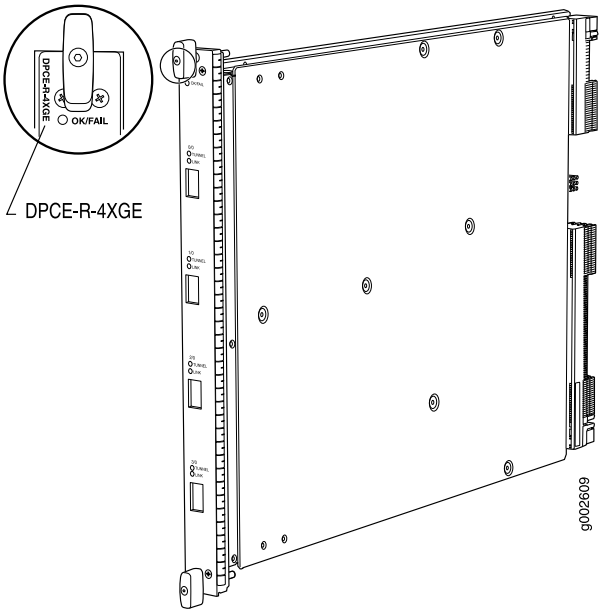

Software release	• 2-port: Junos OS Release 9.1 and later End-of-life (see notification PSN-2011-02-314) • 4-port: Junos OS Release 8.4 and later
Description	2-port: • Two 10-Gigabit Ethernet ports • Power requirement: 3.65 A @ 48 V (175 W) • Weight: 12 lb (5.4 kg) • Model number: DPCE-R-2XGE-XFP • Name in the CLI: DPCE 2x 10GE R 4-port: • Four 10-Gigabit Ethernet ports • Power requirement: 6.46 A @ 48 V (310 W) • Weight: 13.1 lb (5.9 kg) • Model number: DPCE-R-4XGE-XFP • Name in the CLI: DPCE 4x 10GE R

Hardware features	• High-performance throughput on each port at speeds up to 10 Gbps • WAN-PHY mode at 9.953 Gbps • LAN-PHY mode at 10.3125 Gbps • Full-duplex mode • Maximum transmission units (MTUs) of up to 9192 bytes • Enhanced ASICs for increased performance and scalability of Layer 2 features
Software features	• Configurable WAN-PHY mode options • See "Protocols and Applications Supported by DPCs and Enhanced DPCs (DPC and DPCE-R)" on page 251 for information about the protocols and applications that these DPCs support.

Interfaces	Syntax: xe-*fpc/pic/port* where:
	• fpc: Slot in the router where the DPC is installed
	• pic:
	  • 2-port: 0 or 1
	  • 4-port: 0 through 3
	• port: 0
	For example, xe-1/0/0 is the interface for the first port on a DPC installed in slot 1.

Cables and connectors	TIP: You can use the Hardware Compatibility Tool to find information about the pluggable transceivers supported on your Juniper Networks device. The list of supported transceivers for the MX Series is located at https://pathfinder.juniper.net/hct/category/#catKey=100001&modelType;=All&pf;=MX+Series. You can install any transceiver supported by the DPC. For information about installing and removing transceivers, see the hardware guide for your router.
LEDs	**OK/FAIL** LED, one bicolor: • Steady green—DPC is functioning normally. • Blinking green—DPC is transitioning online or offline. • Red—DPC has failed. **TUNNEL** LED, one green per port: • Off—Normal operating mode. • On steadily—Port configured in tunnel mode. **LINK** LED, one green per port: • Off—No link. • On steadily—Link is active. The **TUNNEL** and **LINK** LEDs are labeled top to bottom: • 2-port: **0/0** through **1/0** • 4-port: **0/0** through **3/0**

Related Documentation

- MX Series DPC Overview on page 7
- DPCs Supported on MX240, MX480, and MX960 Routers on page 8

Copyright © 2019, Juniper Networks, Inc.

10-Gigabit Ethernet Enhanced Ethernet Services DPC with XFP

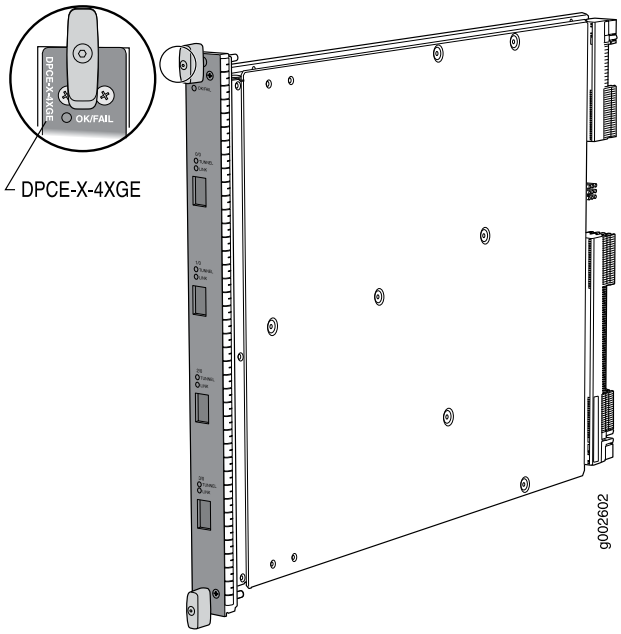

Software release	• Junos OS Release 8.4 and later
Description	• Four 10-Gigabit Ethernet ports • Power requirement: 6.46 A @ 48 V (310 W) • Weight: 13.1 lb (5.9 kg) • Model number: DPCE-X-4XGE-XFP • Name in the CLI: DPCE 4x 10GE X
Hardware features	• High-performance throughput on each port at speeds up to 10 Gbps • WAN-PHY mode at 9.953 Gbps • LAN-PHY mode at 10.3125 Gbps • Full-duplex mode • Maximum transmission units (MTUs) of up to 9192 bytes • Enhanced ASICs for increased performance and scalability of Layer 2 features
Software features	• Configurable WAN-PHY mode options • See "Protocols and Applications Supported by Enhanced Ethernet Services DPCs (DPCE-X)" on page 257 for information about the protocols and applications that this DPC supports. NOTE: The routing table is limited to 32,000 IP routes. This limitation applies to any manner in which the routes are learned, such as OSPF, RIP, and so on. The DPC supports BGP for L2 VPNs only.

Interfaces	Syntax: xe-*fpc/pic/port* where: • fpc: Slot in the router where the DPC is installed • pic: 0 through 3 • port: 0 For example, xe-1/0/0 is the interface for the first port on a DPC installed in slot 1.
Cables and connectors	TIP: You can use the Hardware Compatibility Tool to find information about the pluggable transceivers supported on your Juniper Networks device. The list of supported transceivers for the MX Series is located at https://pathfinder.juniper.net/hct/category/#catKey=100001&modelType;=All&pf;=MX+Series. You can install any transceiver supported by the DPC. For information about installing and removing transceivers, see the hardware guide for your router.
LEDs	**OK/FAIL** LED, one bicolor: • Steady green—DPC is functioning normally. • Blinking green—DPC is transitioning online or offline. • Red—DPC has failed. **TUNNEL** LED, one green per port: • Off—Normal operating mode. • On steadily—Port configured in tunnel mode. **LINK** LED, one green per port: • Off—No link. • On steadily—Link is active. The **TUNNEL** and **LINK** LEDs are labeled top to bottom **0/0** through **3/0**.

Related Documentation

- MX Series DPC Overview on page 7
- DPCs Supported on MX240, MX480, and MX960 Routers on page 8

Copyright © 2019, Juniper Networks, Inc.

10-Gigabit Ethernet Enhanced Queuing Ethernet Services DPC with XFP

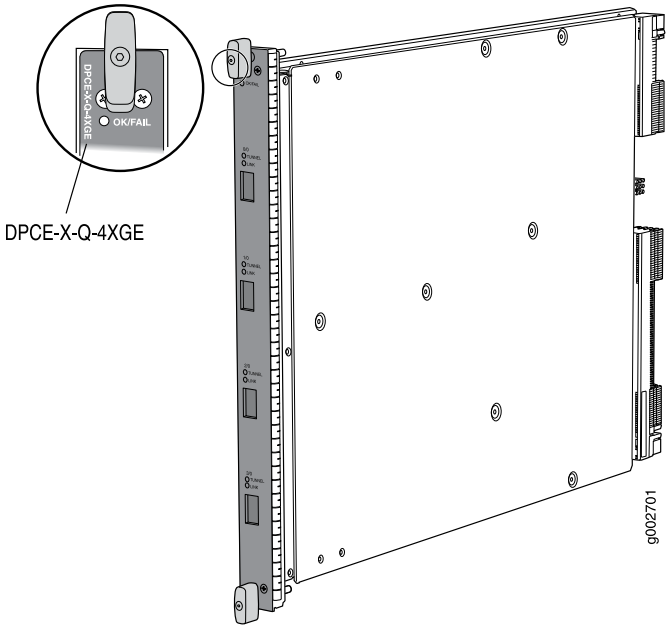

Software release	• Junos OS Release 8.5 and later
Description	• Four 10-Gigabit Ethernet ports • Power requirement: 6.87 A @ 48 V (330 W) • Weight: 13.1 lb (5.9 kg) • Model number: DPCE-X-Q-4XGE-XFP • Name in the CLI: DPCE 4x 10GE X EQ
Hardware features	• High-performance throughput on each port at speeds up to 10 Gbps • WAN-PHY mode at 9.953 Gbps • LAN-PHY mode at 10.3125 Gbps • Full-duplex mode • Maximum transmission units (MTUs) of up to 9192 bytes • Enhanced ASICs for increased performance and scalability of Layer 2 features
Software features	• Configurable WAN-PHY mode options • See "Protocols and Applications Supported by Enhanced Queuing Ethernet Services DPCs (DPCE-X-Q)" on page 266 for information about the protocols and applications that this DPC supports. NOTE: The routing table is limited to 32,000 IP routes. This limitation applies to any manner in which the routes are learned, such as OSPF, RIP, and so on. The DPC supports BGP for L2 VPNs only.

Interfaces	Syntax: xe-*fpc/pic/port* where: • fpc: Slot in the router where the DPC is installed • pic: 0 through 3 • port: 0 For example, xe-1/0/0 is the interface for the first port on a DPC installed in slot 1.
Cables and connectors	TIP: You can use the Hardware Compatibility Tool to find information about the pluggable transceivers supported on your Juniper Networks device. The list of supported transceivers for the MX Series is located at https://pathfinder.juniper.net/hct/category/#catKey=100001&modelType;=All&pf;=MX+Series. You can install any transceiver supported by the DPC. For information about installing and removing transceivers, see the hardware guide for your router.
LEDs	**OK/FAIL** LED, one bicolor: • Steady green—DPC is functioning normally. • Blinking green—DPC is transitioning online or offline. • Red—DPC has failed. **TUNNEL** LED, one green per port: • Off—Normal operating mode. • On steadily—Port configured in tunnel mode. **LINK** LED, one green per port: • Off—No link. • On steadily—Link is active. The **TUNNEL** and **LINK** LEDs are labeled top to bottom **0/0** through **3/0**.

Related Documentation

- MX Series DPC Overview on page 7
- DPCs Supported on MX240, MX480, and MX960 Routers on page 8

Copyright © 2019, Juniper Networks, Inc.

10-Gigabit Ethernet Enhanced Queuing IP Services DPC with XFP

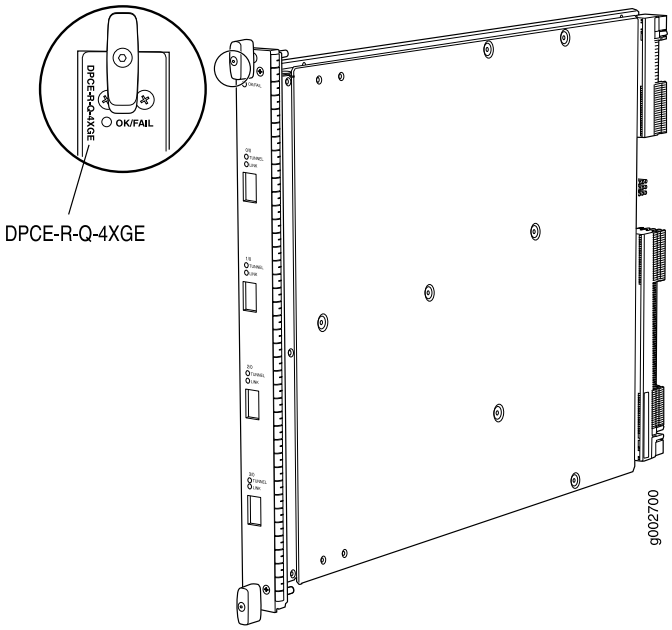

Software release	• Junos OS Release 8.5 and later • End-of-life (see notification PSN-2011-07-314)
Description	• Four 10-Gigabit Ethernet ports • Power requirement: 6.87 A @ 48 V (330 W) • Weight: 13.1 lb (5.9 kg) • Model number: DPCE-R-Q-4XGE-XFP • Name in the CLI: DPCE 4x 10GE R EQ
Hardware features	• High-performance throughput on each port at speeds up to 10 Gbps • WAN-PHY mode at 9.953 Gbps • LAN-PHY mode at 10.3125 Gbps • Full-duplex mode • Maximum transmission units (MTUs) of up to 9192 bytes • Enhanced ASICs for increased performance and scalability of Layer 2 features
Software features	• Configurable WAN-PHY mode options • See "Protocols and Applications Supported by Enhanced Queuing IP Services DPCs (DPCE-R-Q)" on page 261 for information about the protocols and applications that this DPC supports.
Interfaces	Syntax: xe-*fpc/pic/port* where: • fpc: Slot in the router where the DPC is installed • pic: 0 through 3 • port: 0 For example, xe-1/0/0 is the interface for the first port on a DPC installed in slot 1.

Cables and connectors	TIP: You can use the Hardware Compatibility Tool to find information about the pluggable transceivers supported on your Juniper Networks device. The list of supported transceivers for the MX Series is located at https://pathfinder.juniper.net/hct/category/#catKey=100001&modelType;=All&pf;=MX+Series. You can install any transceiver supported by the DPC. For information about installing and removing transceivers, see the hardware guide for your router.
LEDs	**OK/FAIL** LED, one bicolor: • Steady green—DPC is functioning normally. • Blinking green—DPC is transitioning online or offline. • Red—DPC has failed. **TUNNEL** LED, one green per port: • Off—Normal operating mode. • On steadily—Port configured in tunnel mode. **LINK** LED, one green per port: • Off—No link. • On steadily—Link is active. The **TUNNEL** and **LINK** LEDs are labeled top to bottom **0/0** through **3/0**.

Related Documentation

- MX Series DPC Overview on page 7
- DPCs Supported on MX240, MX480, and MX960 Routers on page 8

Copyright © 2019, Juniper Networks, Inc.

Multi-Rate Ethernet Enhanced DPC with SFP and XFP

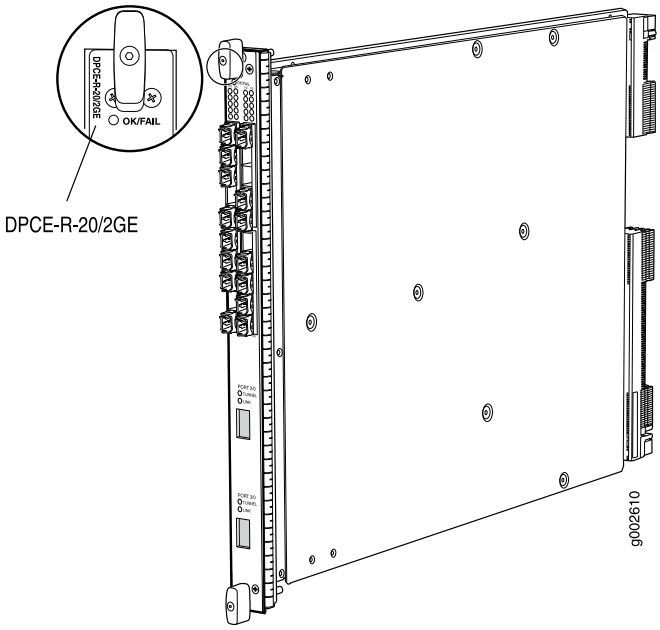

Software release	• Junos OS Release 9.2 and later
Description	• 20 Gigabit Ethernet ports • 2 10-Gigabit Ethernet ports • Power requirement: 6.94 A @ 48 V (333 W) • Weight: 13.1 lb (5.9 kg) • Supports large Ethernet frame sizes for more efficient throughput across the intra-POP network • Model number: DPCE-R-20GE-2XGE • Name in the CLI: DPCE 20x 1GE + 2x 10GE R

Hardware features	• SFP ports:
	  ◦ High-performance throughput on each port at speeds up to 1 Gbps
	• XFP ports:
	  ◦ High-performance throughput on each port at speeds up to 10 Gbps
	  ◦ WAN-PHY mode at 9.953 Gbps
	  ◦ LAN-PHY mode at 10.3125 Gbps
	• Autonegotiation between Gigabit Ethernet circuit partners
	• Full-duplex mode
	• Maximum transmission units (MTUs) of up to 9192 bytes
	• Enhanced ASICs for increased performance and scalability of Layer 2 features

Software features	• Configurable WAN-PHY mode options • Optical diagnostics and related alarms • See "Protocols and Applications Supported by DPCs and Enhanced DPCs (DPC and DPCE-R)" on page 251 for information about the protocols and applications that this DPC supports.

Interfaces	Syntax: *mediatype-fpc/pic/port* where:
	• mediatype: ge or xe
	• fpc: Slot in the router where the DPC is installed
	• pic:
	  • ge: 0 or 1
	  • xe: 2 or 3
	• port:
	  • ge: 0 through 9
	  • xe: 0
	For example, xe-1/3/0 is the interface for the port labeled **PORT 3/0** on a DPC installed in slot 1.

Cables and connectors	TIP: You can use the Hardware Compatibility Tool to find information about the pluggable transceivers supported on your Juniper Networks device. The list of supported transceivers for the MX Series is located at https://pathfinder.juniper.net/hct/category/#catKey=100001&modelType;=All&pf;=MX+Series. You can install any transceiver supported by the DPC. For information about installing and removing transceivers, see the hardware guide for your router.
LEDs	**OK/FAIL** LED, one bicolor: • Steady green—DPC is functioning normally. • Blinking green—DPC is transitioning online or offline. • Red—DPC has failed. **LINK** LED, one green per port: • Off—No link. • On steadily—Link is active. **TUNNEL** LED, one green per XFP port: • Off—Normal operating mode. • On steadily—Port configured in tunnel mode. The SFP Link LEDs are labeled in groups of five: • **0/0** for **0/0** through **0/4** • **0/5** for **0/5** through **0/9** • **1/0** for **1/0** through **1/4** • **1/5** for **1/5** through **1/9** The XFP ports are labeled top to bottom **2/0** and **3/0**.

Related Documentation

- MX Series DPC Overview on page 7
- DPCs Supported on MX240, MX480, and MX960 Routers on page 8

Copyright © 2019, Juniper Networks, Inc.

Multi-Rate Ethernet Enhanced Ethernet Services DPC with SFP and XFP

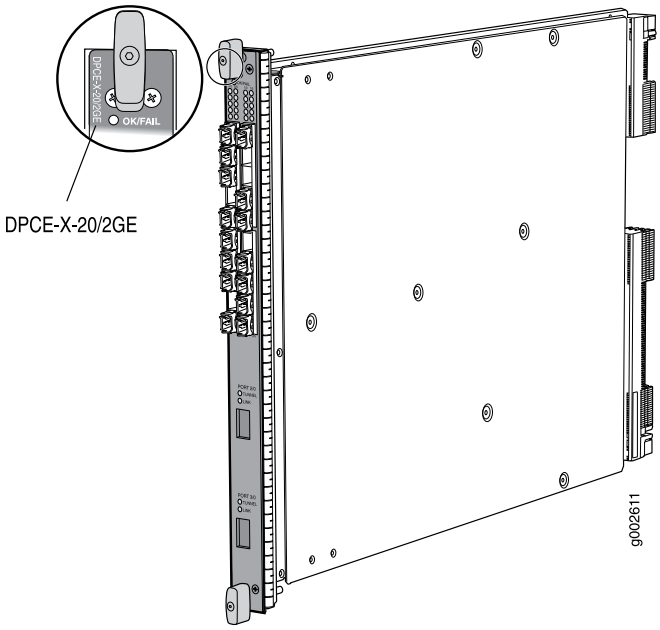

Software release	• Junos OS Release 9.2 and later • End-of-life (see notification PSN-2011-07-314)
Description	• 20 Gigabit Ethernet ports • 2 10-Gigabit Ethernet ports • Power requirement: 6.94 A @ 48 V (333 W) • Weight: 13.1 lb (5.9 kg) • Supports large Ethernet frame sizes for more efficient throughput across the intra-POP network • Model number: DPCE-X-20GE-2XGE • Name in the CLI: DPCE 20x 1GE + 2x 10GE X

Hardware features	• SFP ports:
	  ◦ High-performance throughput on each port at speeds up to 1 Gbps
	• XFP ports:
	  ◦ High-performance throughput on each port at speeds up to 10 Gbps
	  ◦ WAN-PHY mode at 9.953 Gbps
	  ◦ LAN-PHY mode at 10.3125 Gbps
	• Full-duplex mode
	• Maximum transmission units (MTUs) of up to 9192 bytes
	• Enhanced ASICs for increased performance and scalability of Layer 2 features

Software features	• Configurable WAN-PHY mode options • Optical diagnostics and related alarms • See "Protocols and Applications Supported by Enhanced Ethernet Services DPCs (DPCE-X)" on page 257 for information about the protocols and applications that this DPC supports.

Interfaces	Syntax: *mediatype-fpc/pic/port* where:
	• mediatype: ge or xe
	• fpc: Slot in the router where the DPC is installed
	• pic:
	  • ge: 0 or 1
	  • xe: 2 or 3
	• port:
	  • ge: 0 through 9
	  • xe: 0
	For example, xe-1/3/0 is the interface for the port labeled **PORT 3/0** on a DPC installed in slot 1.

Cables and connectors	TIP: You can use the Hardware Compatibility Tool to find information about the pluggable transceivers supported on your Juniper Networks device. The list of supported transceivers for the MX Series is located at https://pathfinder.juniper.net/hct/category/#catKey=100001&modelType;=All&pf;=MX+Series. You can install any transceiver supported by the DPC. For information about installing and removing transceivers, see the hardware guide for your router.
LEDs	**OK/FAIL** LED, one bicolor: • Steady green—DPC is functioning normally. • Blinking green—DPC is transitioning online or offline. • Red—DPC has failed. **LINK** LED, one green per port: • Off—No link. • On steadily—Link is active. **TUNNEL** LED, one green per XFP port: • Off—Normal operating mode. • On steadily—Port configured in tunnel mode. The SFP Link LEDs are labeled in groups of five: • **0/0** for **0/0** through **0/4** • **0/5** for **0/5** through **0/9** • **1/0** for **1/0** through **1/4** • **1/5** for **1/5** through **1/9** The XFP ports are labeled top to bottom **2/0** and **3/0**.

Related Documentation

- MX Series DPC Overview on page 7
- DPCs Supported on MX240, MX480, and MX960 Routers on page 8

Copyright © 2019, Juniper Networks, Inc.

Multi-Rate Ethernet Enhanced Queuing IP Services DPC with SFP and XFP

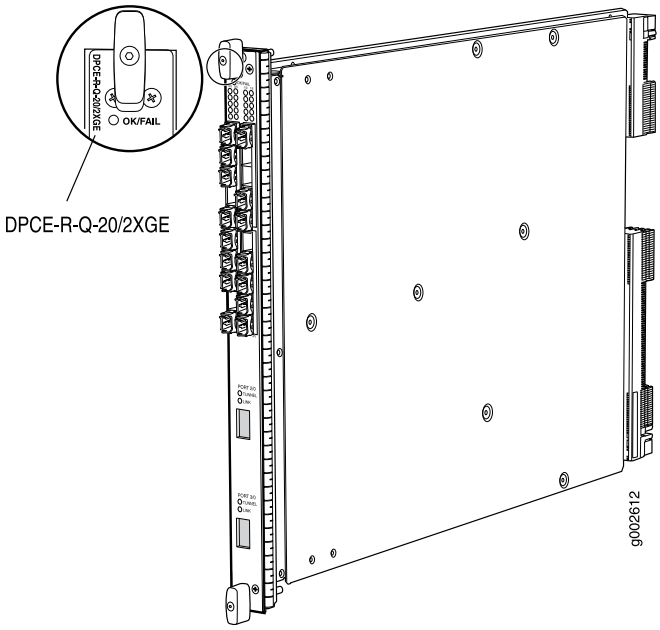

Software release	• Junos OS Release 9.3 and later
Description	• 20 Gigabit Ethernet ports • 2 10-Gigabit Ethernet ports • Power requirement: 6.98 A @ 48 V (335 W) • Weight: 13.1 lb (5.9 kg) • Supports large Ethernet frame sizes for more efficient throughput across the intra-POP network • Model number: DPCE-R-Q-20GE-2XGE • Name in the CLI: DPCE 20x 1GE + 2x 10GE R EQ

Hardware features	• SFP ports:
	  ◦ High-performance throughput on each port at speeds up to 1 Gbps
	• XFP ports:
	  ◦ High-performance throughput on each port at speeds up to 10 Gbps
	  ◦ WAN-PHY mode at 9.953 Gbps
	  ◦ LAN-PHY mode at 10.3125 Gbps
	• Full-duplex mode
	• Maximum transmission units (MTUs) of up to 9192 bytes
	• Enhanced ASICs for increased performance and scalability of Layer 2 features

Software features	• Configurable WAN-PHY mode options • Optical diagnostics and related alarms • See "Protocols and Applications Supported by Enhanced Queuing IP Services DPCs (DPCE-R-Q)" on page 261 for information about the protocols and applications that this DPC supports.

Interfaces	Syntax: *mediatype-fpc/pic/port* where:
	• mediatype: ge or xe
	• fpc: Slot in the router where the DPC is installed
	• pic:
	  • ge: 0 or 1
	  • xe: 2 or 3
	• port:
	  • ge: 0 through 9
	  • xe: 0
	For example, xe-1/3/0 is the interface for the port labeled **PORT 3/0** on a DPC installed in slot 1.

Cables and connectors	TIP: You can use the Hardware Compatibility Tool to find information about the pluggable transceivers supported on your Juniper Networks device. The list of supported transceivers for the MX Series is located at https://pathfinder.juniper.net/hct/category/#catKey=100001&modelType;=All&pf;=MX+Series. You can install any transceiver supported by the DPC. For information about installing and removing transceivers, see the hardware guide for your router.
LEDs	**OK/FAIL** LED, one bicolor: • Steady green—DPC is functioning normally. • Blinking green—DPC is transitioning online or offline. • Red—DPC has failed. **LINK** LED, one green per port: • Off—No link. • On steadily—Link is active. **TUNNEL** LED, one green per XFP port: • Off—Normal operating mode. • On steadily—Port configured in tunnel mode. The SFP Link LEDs are labeled in groups of five: • **0/0** for **0/0** through **0/4** • **0/5** for **0/5** through **0/9** • **1/0** for **1/0** through **1/4** • **1/5** for **1/5** through **1/9** The XFP ports are labeled top to bottom **2/0** and **3/0**.

Related Documentation

- MX Series DPC Overview on page 7
- DPCs Supported on MX240, MX480, and MX960 Routers on page 8

Copyright © 2019, Juniper Networks, Inc.

Multiservices DPC

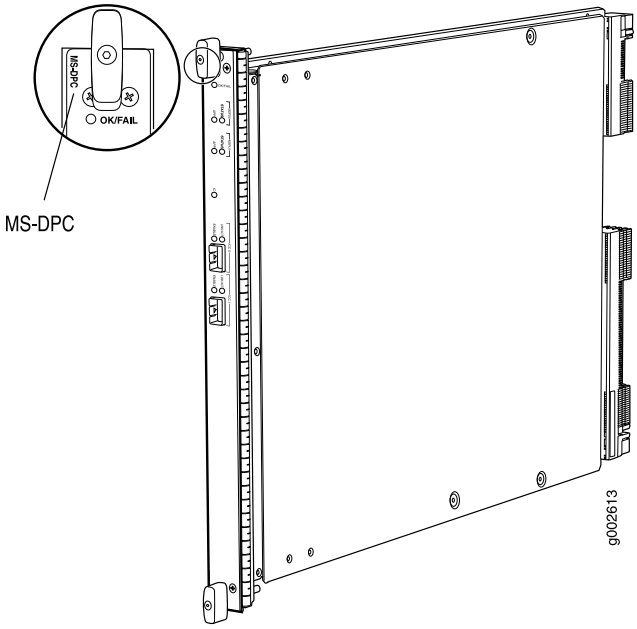

Software release	• Junos OS Release 9.3 and later

Description	• Power requirement: 5.52 A @ 48 V (265 W)
	• Weight: 14.7 lb (6.7 kg)
	• Supports tunnel services. This feature is included with the DPC and does not require an individual license.
	• Individual licenses must be purchased for additional services.
	• Supports large Ethernet frame sizes for more efficient throughput across the intra-POP network
	• The maximum number of supported MS-DPCs is as follows except where noted in "Protocols and Applications Supported by the Multiservices DPC (MS-DPC)" on page 271:
	  • MX240 router: 2
	  • MX480 router: 4
	  • MX960 router: 6
	• Model number: MS-DPC

Hardware features	• Active monitoring on up to 10 million flows • Maximum transmission units (MTUs) of up to 9192 bytes • Two Multiservices Processing Units (MSPUs) per DPC, which include two 1.1Ghz multicore CPUs, each with 4GB of memory for processing integrated services
Software features	• Support for up to 12,000 service sets • See "Protocols and Applications Supported by the Multiservices DPC (MS-DPC)" on page 271 for information about the protocols and applications that this DPC supports.

Interfaces	Syntax: *mediatype-fpc/pic/port* where: • mediatype: gr, pc, pd, etc • fpc: Slot in the router where the MPC is installed • pic: 0 or 1 • port: 0 NOTE: Port number reflects the internal interface and is not a physical port.
Cables and connectors	TIP: You can use the Hardware Compatibility Tool to find information about the pluggable transceivers supported on your Juniper Networks device. The list of supported transceivers for the MX Series is located at https://pathfinder.juniper.net/hct/category/#catKey=100001&modelType;=All&pf;=MX+Series. • SFPs are not supported.
LEDs	**OK/FAIL** LED, one bicolor: • Steady green—DPC is functioning normally. • Blinking green—DPC is transitioning online or offline. • Red—DPC has failed. **STATUS** LED, one tricolor per MSPU: • Off—MSPU is offline. If both MSPUs are offline it is safe to remove the DPC from the chassis. • Green—MSPU is operating normally. • Yellow—MSPU is initializing. • Red—MSPU has an error or failure. Application (**APP**) LED, one tricolor per MSPU: • Off—Service is not running on the MSPU. • Green—Service is running on the MSPU under acceptable load. • Yellow—Service on the MSPU is overloaded.

Related Documentation

- MX Series DPC Overview on page 7
- DPCs Supported on MX240, MX480, and MX960 Routers on page 8

Copyright © 2019, Juniper Networks, Inc.

Tri-Rate Enhanced DPC

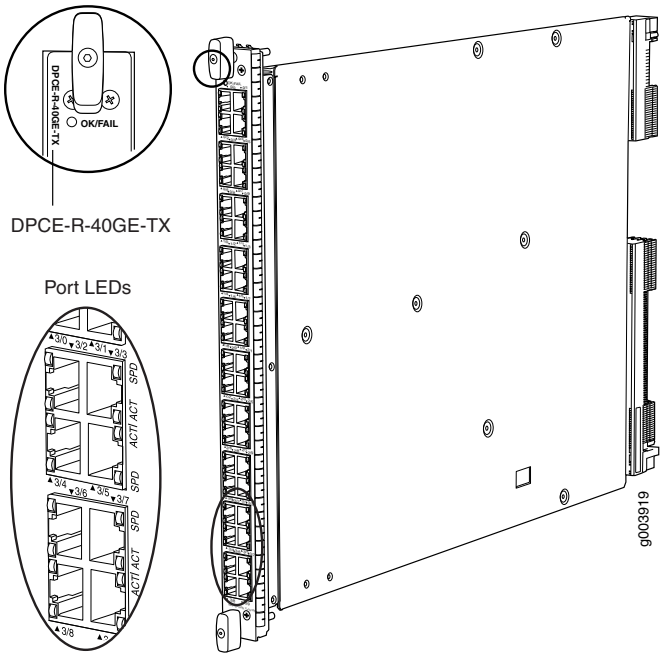

Software release	• Junos OS Release 9.1 and later
Description	• 40 autonegotiating 10BASE-T, 100BASE-TX, or 1000BASE-T Megabit Ethernet ports • Power requirement: 6.67 A @ 48 V (320 W) • Weight: 14.5 lb (6.6 kg) • Supports large Ethernet frame sizes for more efficient throughput across the intra-POP network • Model number: DPCE-R-40GE-TX • Name in the CLI: DPCE 40x 1GE R TX

Hardware features	• High-performance throughput on each port at speeds of 10 Mbps, 100 Mbps, or 1000 Mbps
	• Autonegotiation between Gigabit Ethernet circuit partners
	• Full-duplex mode
	• Maximum transmission units (MTUs) of up to 9192 bytes
	• Enhanced ASICs for increased performance and scalability of Layer 2 features
	• There are four sets of 10 ports labeled:
	  ◦ 0/0 through 0/9
	  ◦ 1/0 through 1/9
	  ◦ 2/0 through 2/9
	  ◦ 3/0 through 3/9

Software features	• See "Protocols and Applications Supported by DPCs and Enhanced DPCs (DPC and DPCE-R)" on page 251 for information about the protocols and applications that this DPC supports.

Interfaces	Syntax: ge-*fpc/pic/port* where: • fpc: Slot in the router where the DPC is installed • pic: Grouping of 10-ports, numbered 0 through 3 • port: 0 through 9 For example, ge-1/3/0 is the interface for port 0 (labeled **3/0**) in the right-most grouping of ports on a DPC installed in slot 1.

Cables and connectors	TIP: You can use the Hardware Compatibility Tool to find information about the pluggable transceivers supported on your Juniper Networks device.
	The list of supported transceivers for the MX Series is located at https://pathfinder.juniper.net/hct/category/#catKey=100001&modelType;=All&pf;=MX+Series.
	• Connector: Four-pair, Category 5 shielded twisted-pair connectivity through an RJ-45 connector
	• Pinout:
	  • Junos OS Release 9.1: MDI
	  • Junos OS Release 9.2 and later: MDI, MDI crossover
	• Maximum distance: 328 ft/100 m
	CAUTION: Do not use RJ-45 cables with strain-relief boots exceeding 1.5 mm from the bottom of the connector. Cable boots that exceed this measurement can damage the port.

LEDs	**OK/FAIL** LED, one bicolor: • Steady green—DPC is functioning normally. • Blinking green—DPC is transitioning online or offline. • Red—DPC has failed. **ACT** LED, one green per port: • Off—No active traffic. • Blinking—Link is active. **SPD** LED, one bicolor: • Green—DPC is functioning in 1000BASE-T mode. • Yellow—DPC is functioning in 10BASE-T or 100BASE-TX mode. • Off—No link. The **ACT** and **SPD** LEDs are located on either side of the ports labeled horizontally and top to bottom **0/0** through **3/9**.

Related Documentation

- MX Series DPC Overview on page 7
- DPCs Supported on MX240, MX480, and MX960 Routers on page 8

Copyright © 2019, Juniper Networks, Inc.

Tri-Rate Enhanced Ethernet Services DPC

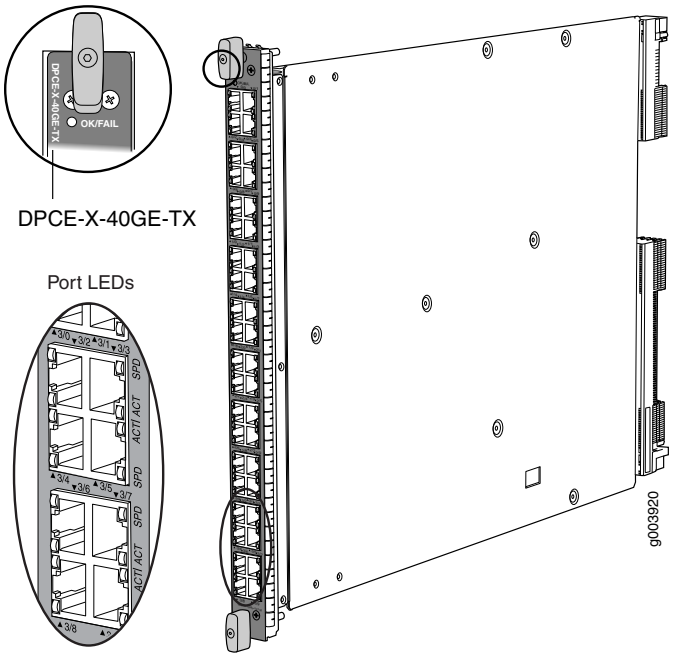

Software release	• Junos OS Release 9.1 and later • EOL (see PSN-2009-06-400)
Description	• 40 autonegotiating 10BASE-T, 100.BASE-TX, or 1000BASE-T Megabit Ethernet ports • Power requirement: 6.67 A @ 48 V (320 W) • Weight: 14.5 lb (6.6 kg) • Supports large Ethernet frame sizes for more efficient throughput across the intra-POP network • Model number: DPCE-X-40GE-TX • Name in the CLI:
Hardware features	• High-performance throughput on each port at speeds of 10 Mbps, 100 Mbps, or 1000 Mbps • Autonegotiation between Gigabit Ethernet circuit partners • Full-duplex mode • Maximum transmission units (MTUs) of up to 9192 bytes • Enhanced ASICs for increased performance and scalability of Layer 2 features
Software features	• See "Protocols and Applications Supported by Enhanced Ethernet Services DPCs (DPCE-X)" on page 257 for information about the protocols and applications that this DPC supports.
Interfaces	Syntax: ge-*fpc/pic/port* where: • fpc: Slot in the router where the DPC is installed • pic: Grouping of 10-ports, numbered 0 through 3 • port: 0 through 9 For example, ge-1/3/0 is the interface for port 0 (labeled **3/0**) in the right-most grouping of ports on a DPC installed in slot 1.

Cables and connectors	TIP: You can use the Hardware Compatibility Tool to find information about the pluggable transceivers supported on your Juniper Networks device.
	
	The list of supported transceivers for the MX Series is located at https://pathfinder.juniper.net/hct/category/#catKey=100001&modelType;=All&pf;=MX+Series.
	
	• Connector: Four-pair, Category 5 shielded twisted-pair connectivity through an RJ-45 connector
	• Pinout:
	  ◦ Junos OS Release 9.1: MDI
	  ◦ Junos OS Release 9.2 and later: MDI, MDI crossover
	• Maximum distance: 328 ft/100 m
	
	CAUTION: Do not use RJ-45 cables with strain-relief boots exceeding 1.5 mm from the bottom of the connector. Cable boots that exceed this measurement can damage the port.

LEDs	**OK/FAIL** LED, one bicolor: • Steady green—DPC is functioning normally. • Blinking green—DPC is transitioning online or offline. • Red—DPC has failed. **ACT** LED, one green per port: • Off—No active traffic. • Blinking—Link is active. **SPD** LED, one bicolor: • Green—DPC is functioning in 1000BASE-T mode. • Yellow—DPC is functioning in 10BASE-T or 100BASE-TX mode. • Off—No link. The **ACT** and **SPD** LEDs are located on either side of the ports labeled horizontally and top to bottom **0/0** through **3/9**.

Related Documentation

- MX Series DPC Overview on page 7
- DPCs Supported on MX240, MX480, and MX960 Routers on page 8

Copyright © 2019, Juniper Networks, Inc.

CHAPTER 8

MX Series MPC Descriptions

- 16x10GE MPC on page 84
- Multiservices MPC on page 86
- MPC1 on page 88
- MPC1E on page 89
- MPC1 Q on page 91
- MPC1E Q on page 93
- MPC2 on page 95
- MPC2E on page 97
- MPC2 Q on page 99
- MPC2E Q on page 101
- MPC2 EQ on page 103
- MPC2E EQ on page 105
- MPC2E P on page 107
- MPC2E NG on page 109
- MPC2E NG Q on page 111
- MPC3E on page 113
- MPC3E NG on page 115
- MPC3E NG Q on page 117
- 32x10GE MPC4E on page 119
- 2x100GE + 8x10GE MPC4E on page 120
- 6x40GE + 24x10GE MPC5E on page 122
- 6x40GE + 24x10GE MPC5EQ on page 124
- 2x100GE + 4x10GE MPC5E on page 126
- 2x100GE + 4x10GE MPC5EQ on page 127
- MPC6E on page 129
- MPC7E (Multi-Rate) on page 130
- MPC7E 10G on page 132
- MPC8E on page 134

Copyright © 2019, Juniper Networks, Inc.

- MPC9E on page 135
- MPC10E-15C-MRATE on page 137
- MX10003 MPC (Multi-Rate) on page 139
- Line card (MX10K-LC2101) on page 140

16x10GE MPC

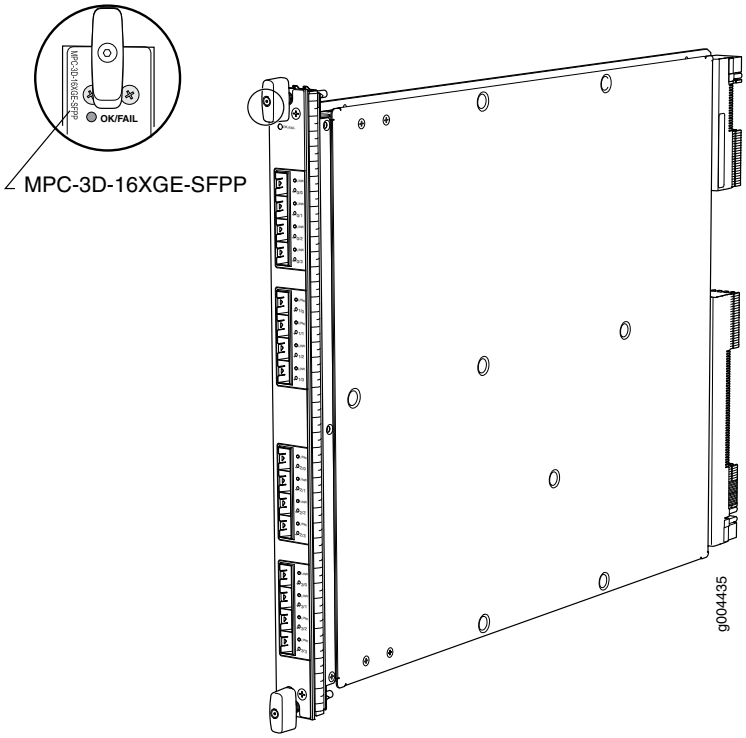

Software release	• MX240, MX480, and MX960 routers : Junos OS Release 10.0R2 and later • MX2010 and MX2020 router: Junos OS Release 12.3 and later

Description	• Fixed configuration MPC with sixteen 10-Gigabit Ethernet ports
	• Power requirement: 9.17 A @ 48 V (440 W)
	• Weight: 18.35 lb (8.3 kg)
	• Model numbers:
	  ◦ MPC-3D-16XGE-SFPP
	  ◦ MPC-3D-16XGE-SFPP-R-B
	• Name in the CLI:
	  ◦ **MPC 3D 16x10GE**
	  ◦ **MPC 3D 16x10GE EM**

Copyright © 2019, Juniper Networks, Inc.

Hardware features	• High-performance throughput on each port at speeds up to 10 Gbps • Four fully programmable Junos Trio chipsets for increased scaling for bandwidth, subscribers, and services • One Junos Trio chipset per set of four ports • LAN-PHY mode at 10.3125 Gbps NOTE: The 16x10GE 3D MPC does not support WAN-PHY mode.
Software features	• Optical diagnostics and related alarms • See "Protocols and Applications Supported on MPCs for MX Series Routers" on page 273 for information about the protocols and applications that this MPC supports.
Interfaces	Syntax: xe-*fpc/pic/port* where: • fpc: Slot in the router where the MPC is installed • pic: Grouping of 4 ports, numbered 0 through 3 • port: 0 through 3 For example, xe-1/3/3 is the interface for the last port (labeled **3/3**) on an MPC installed in slot 1.
Cables and connectors	TIP: You can use the Hardware Compatibility Tool to find information about the pluggable transceivers supported on your Juniper Networks device. The list of supported transceivers for the MX Series is located at https://pathfinder.juniper.net/hct/category/#catKey=100001&modelType;=All&pf;=MX+Series. NOTE: The 16x10GE 3D MPC does not support WAN-PHY mode. NOTE: SFPP-10G-CT50-ZR is not NEBS compliant when plugged into the MPC-3D-16XGE-SFPP. If the ambient air temperature exceeds 40 degrees C, Junos OS disables the transmitter, which takes the optical transceiver offline.
LEDs	**OK/FAIL** LED, one bicolor: • Steady green—MPC is functioning normally. • Blinking green—MPC is transitioning online or offline. • Red—MPC has failed. Enable/disable LED, one bicolor per port: • Green—Port is enabled. • Yellow—Port is not functioning normally. • Off—Port is disabled. The enable/disable LEDs are labeled in groups of four: • **0/0** through **0/3** • **1/0** through **1/3** • **2/0** through **2/3** • **3/0** through **3/3**

Related Documentation

- MX Series MPC Overview on page 11
- MPCs Supported by MX Series Routers on page 12
- *Media MTU Sizes by Interface Type*

Multiservices MPC

Figure 7: Multiservices MPC

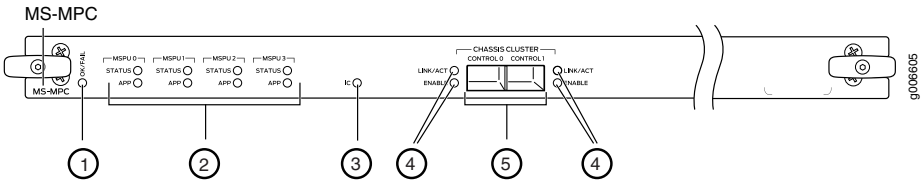

1—OK/Fail LED	4—Link/Act and Enable LEDs
2—MSPU Status and APP LEDs	5—Control 0 and Control 1 ports
3—IC LED	

Software release	• Junos OS Release 13.2R4 and later For information on which MPCs are supported on MX Series routers, see "MPCs Supported by MX Series Routers" on page 12.
Description	• Power requirement: 12.2 Amps @ 48 V (585 W) • Weight: 14 lbs. • Model number: MS-MPC • Name in the CLI: **MS-MPC**
Hardware features	• One Junos Trio chipset for increased scaling for bandwidth, subscribers, and services. • Enhanced memory with 128 GB of memory (32 GB per NPU) and processing capabilities. • NPU CPU Clock Cycle of 1.2GHz. • Four NPUs per MPC. • Works with SCBs and SCBEs. • Interoperable with MS-DPCs. Both MS-MPCs and MS-DPCs can co-exist in the same chassis.
Software features	• Active flow monitoring and export of flow monitoring version 9 records based on RFC 3954 • IP Security (IPsec) encryption • Network Address Translation (NAT) for IP addresses • Port Address Translation (PAT) for port numbers • Traffic sampling • Stateful firewall with packet inspection—detects SYN attacks, ICMP and UDP floods, and ping-of-death attacks • Network Attack Protection (NAP) • Support for up to 6000 service sets • Support for MTUs up to 9192 bytes. • Multiple services can be supported. See *Junos OS Services Interfaces Library for Routing Devices* for more information. • See "Protocols and Applications Supported by the MS-MIC and MS-MPC" on page 340 for information about the protocols and applications that this MIC supports.

Copyright © 2019, Juniper Networks, Inc.

LEDs	**OK/FAIL** LED, one bicolor: • Steady green—MPC is functioning normally. • Blinking green—MPC is transitioning online or offline. • Red—MPC has failed. IC LED—Reserved for future use. **STATUS** LED, one tricolor per MSPU: • Off—MSPU is offline. If both MSPUs are offline it is safe to remove the DPC from the chassis. • Green—MSPU is operating normally. • Yellow—MSPU is initializing. • Red—MSPU has an error or failure. Application (**APP**) LED, one tricolor per MSPU: • Off—Service is not running on the MSPU. • Green—Service is running on the MSPU under acceptable load. • Yellow—Service on the MSPU is reconfiguring. • Red—Service on the MSPU has failed. Activity (**LINK/ACT**) LED, one per control port: • Off—No link. • Green—Chassis cluster control port link is active. **ENABLE** LED, one per control port: • Off—Chassis cluster control port is disabled. • Green—Chassis cluster control port is enabled.

Related Documentation

- MX Series MPC Overview on page 11
- *Multiservices MIC and Multiservices MPC (MS-MIC and MS-MPC) Overview*
- Multiservices MIC on page 205

MPC1

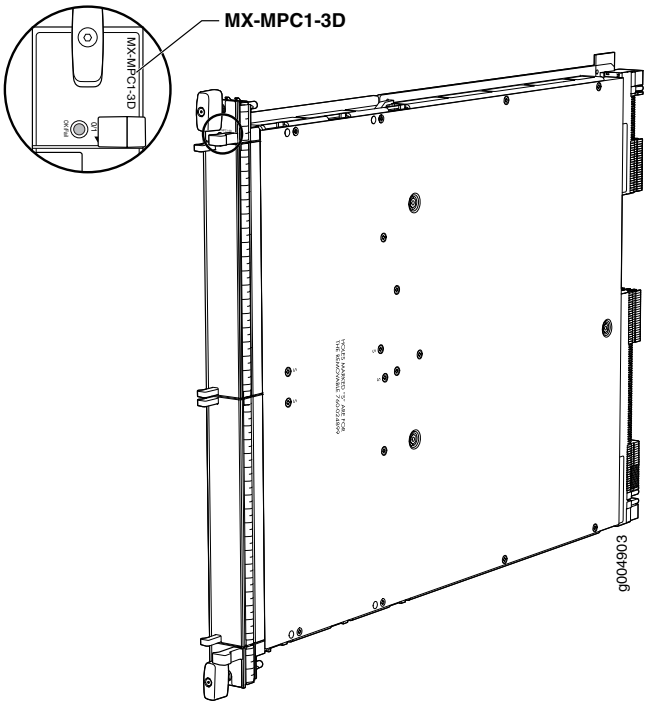

Software release	• MX240, MX480, and MX960 routers: Junos OS Release 10.2 and later • MX2010 and MX2020 router: Junos OS Release 12.3 and later For information on which MICs are supported on this MPC, "MIC/MPC Compatibility" on page 26.
Description	• Power requirement: 3.4 A @ 48 V (165 W) • Weight: 13.8 lb (6.3 kg) • Model number: MX-MPC1-3D • Name in the CLI: **MPC Type 1 3D**
Hardware features	• Two slots for MICs labeled **PIC 0/1** and **PIC 2/3** • One Junos Trio chipset for increased scaling for bandwidth, subscribers, and services • LAN-PHY mode at 10.3125 Gbps • WAN-PHY mode at 9.953 Gbps
Software features	• See "Protocols and Applications Supported on MPCs for MX Series Routers" on page 273 for information about the protocols and applications that this MPC supports.
LEDs	**OK/FAIL** LED, one bicolor: • Steady green—MPC is functioning normally. • Blinking green—MPC is transitioning online or offline. • Red—MPC has failed.

Copyright © 2019, Juniper Networks, Inc.

Related Documentation

- MX Series MPC Overview on page 11
- MPCs Supported by MX Series Routers on page 12

MPC1E

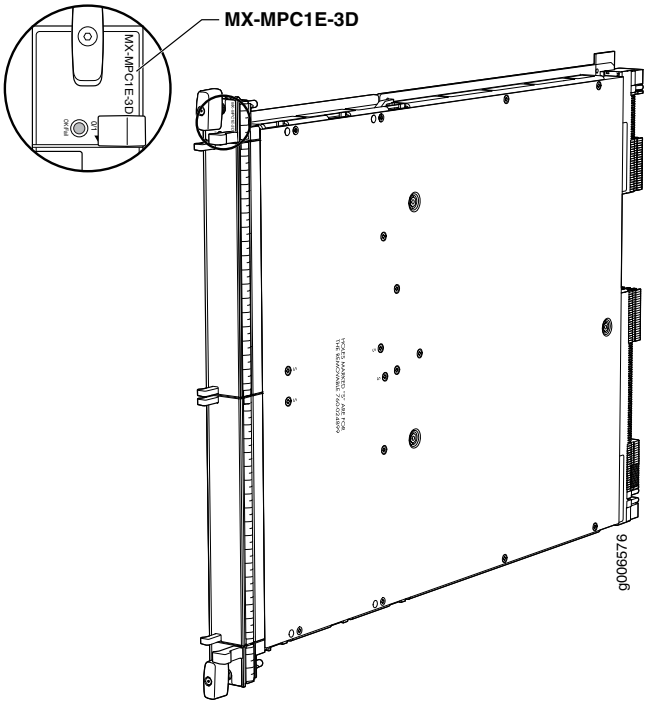

Software release	• MX240, MX480, and MX960 routers: Junos OS Release 11.2R4 and later • MX2010 and MX2020 router: Junos OS Release 12.3 and later For information on which MICs are supported on this MPC, "MIC/MPC Compatibility" on page 26.
Description	• Power requirement: 3.4 A @ 48 V (165 W) • Weight: 13.8 lb (6.3 kg) • Model number: MX-MPC1E-3D • Name in the CLI: **MPCE Type 1 3D**
Hardware features	• Two slots for MICs labeled **PIC 0/1** and **PIC 2/3** • One Junos Trio chipset for increased scaling for bandwidth, subscribers, and services • LAN-PHY mode at 10.3125 Gbps • WAN-PHY mode at 9.953 Gbps
Software features	• See "Protocols and Applications Supported on the MPC1E for MX Series Routers" on page 282 for information about the protocols and applications that this MPC supports.

LEDs	**OK/FAIL** LED, one bicolor: • Steady green—MPC is functioning normally. • Blinking green—MPC is transitioning online or offline. • Red—MPC has failed.

Copyright © 2019, Juniper Networks, Inc.

Related Documentation

- MX Series MPC Overview on page 11
- MPCs Supported by MX Series Routers on page 12

MPC1 Q

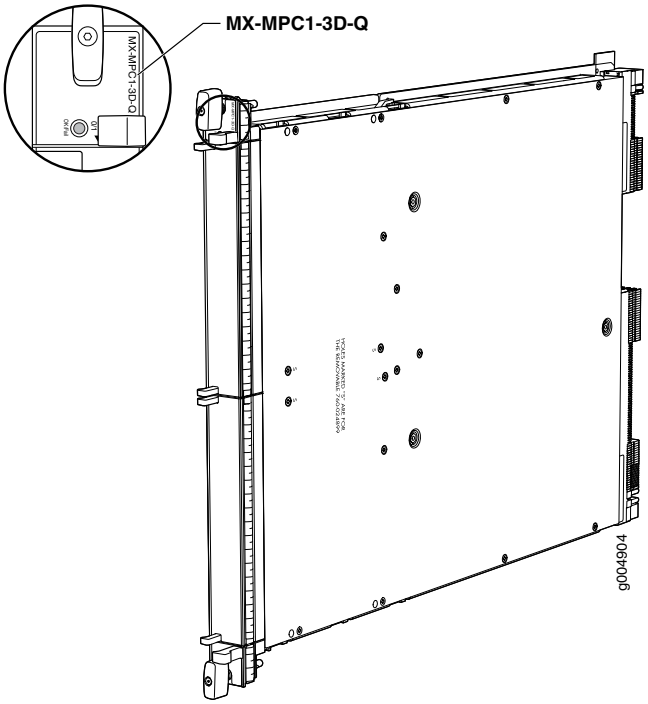

Software release	• MX240, MX480, and MX960 routers: Junos OS Release 10.2 and later • MX2010 and MX2020 router: Junos OS Release 12.3 and later For information on which MICs are supported on this MPC, "MIC/MPC Compatibility" on page 26.
Description	• Power requirement: 3.65 A @ 48 V (175 W) • Weight: 13.8 lb (6.3 kg) • Model number: MX-MPC1-3D-Q • Name in the CLI: **MPC Type 1 3D Q**
Hardware features	• Two slots for MICs labeled **PIC 0/1** and **PIC 2/3** • One Junos Trio chipset for increased scaling for bandwidth, subscribers, and services • LAN-PHY mode at 10.3125 Gbps • WAN-PHY mode at 9.953 Gbps
Software features	• See "Protocols and Applications Supported on MPCs for MX Series Routers" on page 273 for information about the protocols and applications that this MPC supports.

LEDs	**OK/FAIL** LED, one bicolor: • Steady green—MPC is functioning normally. • Blinking green—MPC is transitioning online or offline. • Red—MPC has failed.

Copyright © 2019, Juniper Networks, Inc.

Related Documentation

- MX Series MPC Overview on page 11
- MPCs Supported by MX Series Routers on page 12

MPC1E Q

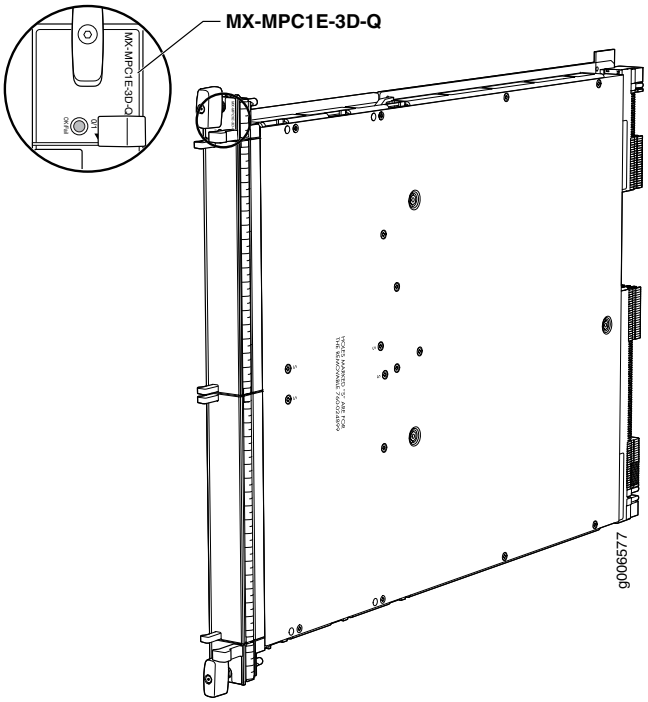

Software release	• MX240, MX480, and MX960 routers: Junos OS Release 11.2R4 and later • MX2010 and MX2020 router: Junos OS Release 12.3 and later For information on which MICs are supported on this MPC, "MIC/MPC Compatibility" on page 26.
Description	• Power requirement: 3.65 A @ 48 V (175 W) • Weight: 13.8 lb (6.3 kg) • Model number: MX-MPC1E-3D-Q • Name in the CLI: **MPCE Type 1 3D Q**
Hardware features	• Two slots for MICs labeled **PIC 0/1** and **PIC 2/3** • One Junos Trio chipset for increased scaling for bandwidth, subscribers, and services • LAN-PHY mode at 10.3125 Gbps • WAN-PHY mode at 9.953 Gbps
Software features	• See "Protocols and Applications Supported on the MPC1E for MX Series Routers" on page 282 for information about the protocols and applications that this MPC supports.

LEDs	**OK/FAIL** LED, one bicolor: • Steady green—MPC is functioning normally. • Blinking green—MPC is transitioning online or offline. • Red—MPC has failed.

Copyright © 2019, Juniper Networks, Inc.

Related Documentation

- MX Series MPC Overview on page 11
- MPCs Supported by MX Series Routers on page 12

MPC2

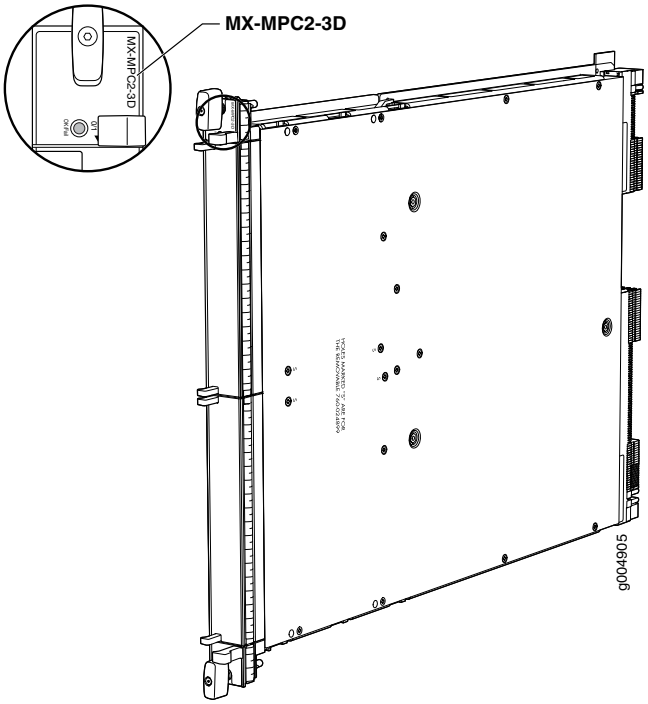

Software release	• MX240, MX480, and MX960 routers : Junos OS Release 10.1 and later • MX2010 and MX2020 router: Junos OS Release 12.3 and later For information on which MICs are supported on this MPC, "MIC/MPC Compatibility" on page 26.
Description	• Power requirement: 5.7 A @ 48 V (274 W) • Weight: 14 lb (6.4 kg) • Model number: MX-MPC2-3D • Name in the CLI: **MPC Type 2 3D**
Hardware features	• Two slots for MICs labeled **PIC 0/1** and **PIC 2/3** • Two Junos Trio chipsets for increased scaling for bandwidth, subscribers, and services • LAN-PHY mode at 10.3125 Gbps • WAN-PHY mode at 9.953 Gbps
Software features	• See "Protocols and Applications Supported on MPCs for MX Series Routers" on page 273 for information about the protocols and applications that this MPC supports.

LEDs	**OK/FAIL** LED, one bicolor: • Steady green—MPC is functioning normally. • Blinking green—MPC is transitioning online or offline. • Red—MPC has failed.

Copyright © 2019, Juniper Networks, Inc.

Related Documentation

- MX Series MPC Overview on page 11
- MPCs Supported by MX Series Routers on page 12

MPC2E

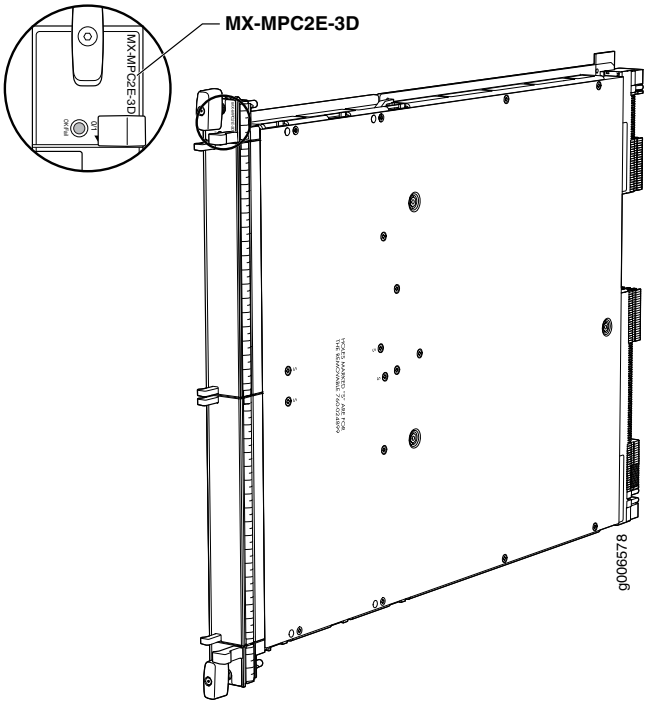

Software release	• MX240, MX480, and MX960 routers : Junos OS Release 11.2R4 and later • MX2010 and MX2020 router: Junos OS Release 12.3 and later For information on which MICs are supported on this MPC, "MIC/MPC Compatibility" on page 26.
Description	• Power requirement: 5.7 A @ 48 V (274 W) • Weight: 14 lb (6.4 kg) • Model number: MX-MPC2E-3D • Name in the CLI: **MPCE Type 2 3D**
Hardware features	• Two slots for MICs labeled **PIC 0/1** and **PIC 2/3** • Two Junos Trio chipsets for increased scaling for bandwidth, subscribers, and services • LAN-PHY mode at 10.3125 Gbps • WAN-PHY mode at 9.953 Gbps
Software features	• See "Protocols and Applications Supported by the MX240, MX480, MX960, MX2010, and MX2020 MPC2E" on page 288 for information about the protocols and applications that this MPC supports.

LEDs	**OK/FAIL** LED, one bicolor: • Steady green—MPC is functioning normally. • Blinking green—MPC is transitioning online or offline. • Red—MPC has failed.

Copyright © 2019, Juniper Networks, Inc.

Related Documentation

- MX Series MPC Overview on page 11
- MPCs Supported by MX Series Routers on page 12

MPC2 Q

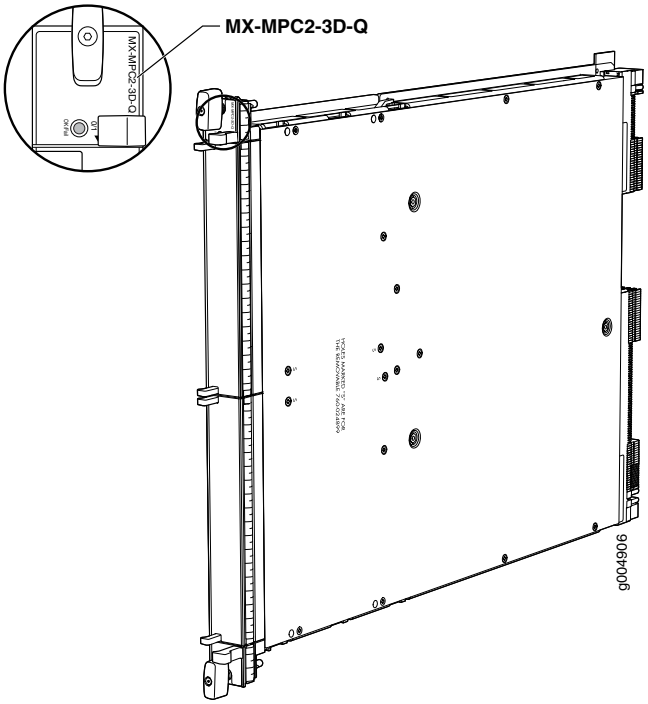

Software release	• MX240, MX480, and MX960 routers : Junos OS Release 10.1 and later • MX2010 and MX2020 router: Junos OS Release 12.3 and later For information on which MICs are supported on this MPC, "MIC/MPC Compatibility" on page 26.
Description	• Power requirement: 6.13 A @ 48 V (294 W) • Weight: 14 lb (6.4 kg) • Model number: MX-MPC2-3D-Q • Name in the CLI: **MPC Type 2 3D Q**
Hardware features	• Two slots for MICs labeled **PIC 0/1** and **PIC 2/3** • Two Junos Trio chipsets for increased scaling for bandwidth, subscribers, and services • LAN-PHY mode at 10.3125 Gbps • WAN-PHY mode at 9.953 Gbps
Software features	• See "Protocols and Applications Supported on MPCs for MX Series Routers" on page 273 for information about the protocols and applications that this MPC supports.

LEDs	**OK/FAIL** LED, one bicolor: • Steady green—MPC is functioning normally. • Blinking green—MPC is transitioning online or offline. • Red—MPC has failed.

Copyright © 2019, Juniper Networks, Inc.

Related Documentation

- MX Series MPC Overview on page 11
- MPCs Supported by MX Series Routers on page 12

MPC2E Q

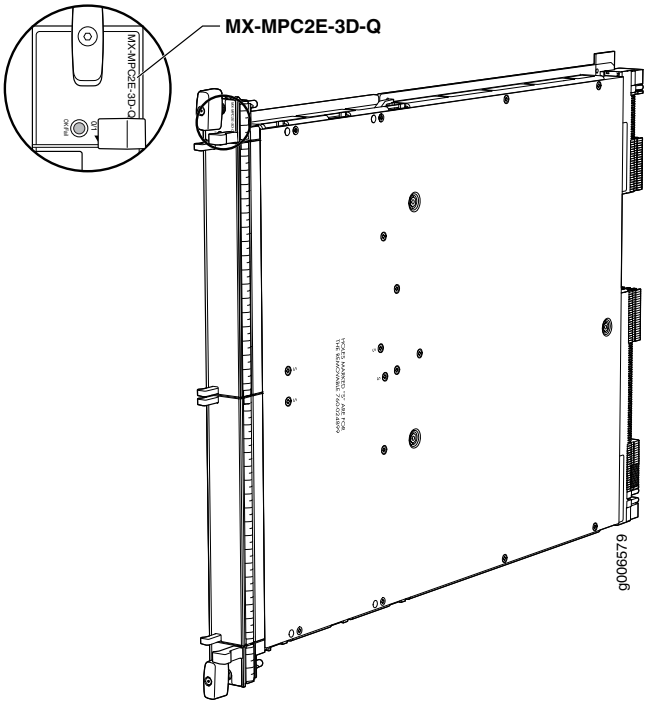

Software release	• MX240, MX480, and MX960 routers : Junos OS Release 11.2R4 and later • MX2010 and MX2020 router: Junos OS Release 12.3 and later For information on which MICs are supported on this MPC, "MIC/MPC Compatibility" on page 26.
Description	• Power requirement: 6.13 A @ 48 V (294 W) • Weight: 14 lb (6.4 kg) • Model number: MX-MPC2E-3D-Q • Name in the CLI: **MPCE Type 2 3D Q**
Hardware features	• Two slots for MICs labeled **PIC 0/1** and **PIC 2/3** • Two Junos Trio chipsets for increased scaling for bandwidth, subscribers, and services • LAN-PHY mode at 10.3125 Gbps • WAN-PHY mode at 9.953 Gbps
Software features	• See "Protocols and Applications Supported by the MX240, MX480, MX960, MX2010, and MX2020 MPC2E" on page 288 for information about the protocols and applications that this MPC supports.

LEDs	**OK/FAIL** LED, one bicolor: • Steady green—MPC is functioning normally. • Blinking green—MPC is transitioning online or offline. • Red—MPC has failed.

Copyright © 2019, Juniper Networks, Inc.

Related Documentation

- MX Series MPC Overview on page 11
- MPCs Supported by MX Series Routers on page 12

MPC2 EQ

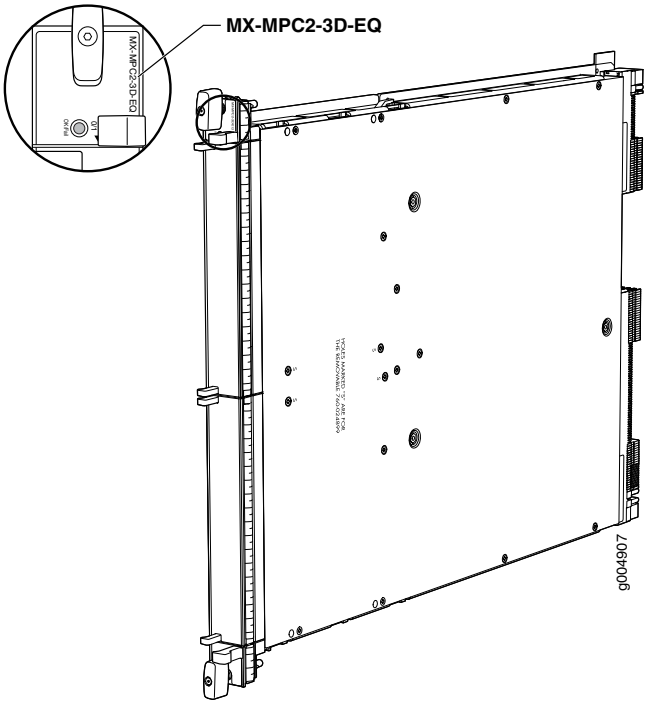

Software release	• MX240, MX480, and MX960 routers : Junos OS Release 10.1 and later • MX2010 and MX2020 router: Junos OS Release 12.3 and later For information on which MICs are supported on this MPC, "MIC/MPC Compatibility" on page 26.
Description	• Power requirement: 6.13 A @ 48 V (294 W) • Weight: 14 lb (6.4 kg) • Model number: MX-MPC2-3D-EQ • Name in the CLI: **MPC Type 2 3D EQ**
Hardware features	• Two slots for MICs labeled **PIC 0/1** and **PIC 2/3** • Two Junos Trio chipsets for increased scaling for bandwidth, subscribers, and services • LAN-PHY mode at 10.3125 Gbps • WAN-PHY mode at 9.953 Gbps
Software features	• See "Protocols and Applications Supported on MPCs for MX Series Routers" on page 273 for information about the protocols and applications that this MPC supports.

LEDs	**OK/FAIL** LED, one bicolor: • Steady green—MPC is functioning normally. • Blinking green—MPC is transitioning online or offline. • Red—MPC has failed.

Copyright © 2019, Juniper Networks, Inc.

Related Documentation

- MX Series MPC Overview on page 11
- MPCs Supported by MX Series Routers on page 12

MPC2E EQ

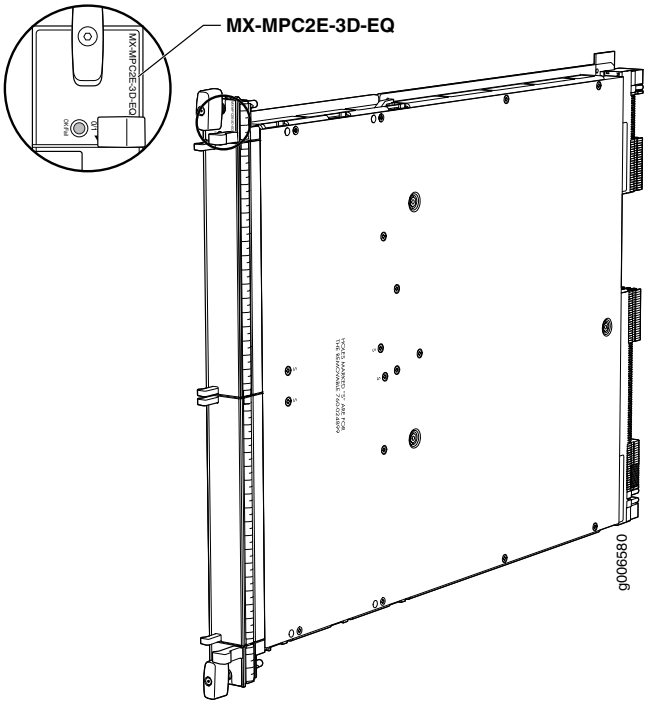

Software release	• MX240, MX480, and MX960 routers : Junos OS Release 11.2R4 and later • MX2010 and MX2020 router: Junos OS Release 12.3 and later For information on which MICs are supported on this MPC, "MIC/MPC Compatibility" on page 26.
Description	• Power requirement: 6.13 A @ 48 V (294 W) • Weight: 14 lb (6.4 kg) • Model number: MX-MPC2E-3D-EQ • Name in the CLI: **MPCE Type 2 3D EQ**
Hardware features	• Two slots for MICs labeled **PIC 0/1** and **PIC 2/3** • Two Junos Trio chipsets for increased scaling for bandwidth, subscribers, and services • LAN-PHY mode at 10.3125 Gbps • WAN-PHY mode at 9.953 Gbps
Software features	• See "Protocols and Applications Supported by the MX240, MX480, MX960, MX2010, and MX2020 MPC2E" on page 288 for information about the protocols and applications that this MPC supports.

LEDs	**OK/FAIL** LED, one bicolor: • Steady green—MPC is functioning normally. • Blinking green—MPC is transitioning online or offline. • Red—MPC has failed.

Copyright © 2019, Juniper Networks, Inc.

Related Documentation

- MX Series MPC Overview on page 11
- MPCs Supported by MX Series Routers on page 12

MPC2E P

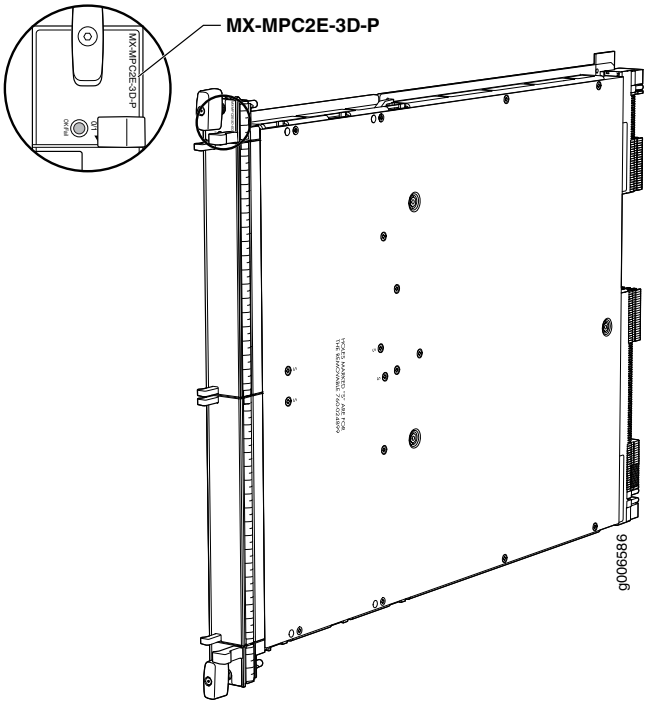

Software release	• MX240, MX480, and MX960 routers : Junos OS Release 12.2 and later • MX2010 and MX2020 router: Junos OS Release 12.3 and later For information on which MICs are supported on this MPC, "MIC/MPC Compatibility" on page 26.
Description	• Power requirement: 6.13 A @ 48 V (294 W) • Weight: 14 lb (6.4 kg) • Model number: MX-MPC2E-3D-P • Name in the CLI: **MPCE Type 2 3D P**
Hardware features	• Two slots for MICs labeled **PIC 0/1** and **PIC 2/3** • Two Junos Trio chipsets for increased scaling for bandwidth, subscribers, and services • LAN-PHY mode at 10.3125 Gbps • WAN-PHY mode at 9.953 Gbps
Software features	• See "Protocols and Applications Supported by the MX240, MX480, MX960, MX2010, and MX2020 MPC2E" on page 288 for information about the protocols and applications that this MPC supports.

LEDs	**OK/FAIL** LED, one bicolor: • Steady green—MPC is functioning normally. • Blinking green—MPC is transitioning online or offline. • Red—MPC has failed.

Copyright © 2019, Juniper Networks, Inc.

Related Documentation

- MX Series MPC Overview on page 11
- MPCs Supported by MX Series Routers on page 12

MPC2E NG

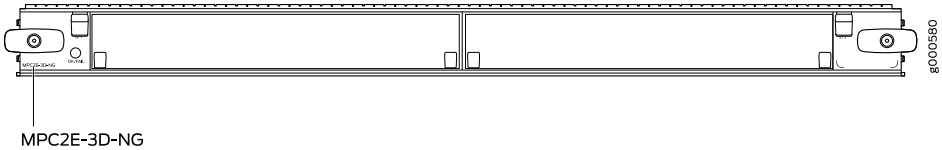

Software release	• Junos OS releases 14.1R4, 14.2R3 and Junos Continuity, Junos OS release 15.1 and later. • Refer to "MIC/MPC Compatibility" on page 26 for information about which MICs are supported on this MPC. • Refer to the JTAC Knowledgebase article https://kb.juniper.net/KB21476 for recommended software releases.
Description	• 80 Gbps capacity without hierarchical quality of service (HQoS) • Requires high-capacity fan trays and high-capacity filter trays • Weight: 15.96 lb (7.26 kg) • Model numbers: MPC2E-3D-NG • Name in the CLI: **MPC2E NG PQ & Flex Q** • Add-on license provides limited additional flexible queuing. NOTE: MPC2E-3D-NG is not compatible with SCB, you must use either SCBE-MX or SCBE2-MX for the switch fabric interface.
Hardware features	• Line-rate throughput of up to 80 Gbps • Supports WAN-PHY mode at 9.95 Gbps and LAN-PHY mode at 10.31 Gbps • Two slots for MICs • Junos Trio chipsets for increased scaling for bandwidth, subscribers, and services. NOTE: MPC2E-3D-NG is not compatible with SCB, you must use either SCBE-MX or SCBE2-MX for the switch fabric interface. NOTE: MPC2E-3D-NG does not support MIC3-3D-10XGE-SFPP, MIC3-3D-1X100GE-CFP, MIC3-3D-1X100GE-CXP, and MIC3-3D-2X40GE-QSFPP. NOTE: The non-HQOS MPC3E NG and MPC2E NG MPCs support MIC-3D-8CHOC3-4CHOC12 and MIC-3D-4CHOC3-2CHOC12 only with a limited queuing license.

Copyright © 2019, Juniper Networks, Inc.

Software features	• Chained composite next hops • Layer 3 VPN localization • Detection of Layer 2 loops • Entropy label support in mixed mode • SNMP and CLI support for Routing Engine memory monitoring • Mixed-mode LAG support on core interfaces • Dynamic power management for MICs • Support for flexible-queuing • See "Protocols and Applications Supported by the MX240, MX480, MX960, MX2010, and MX2020 MPC2E" on page 288 for information about the protocols and applications that this MPC supports.
Power requirement	Maximum with highest-power MICs at 55° C: 9.88 A @ 48 V (474 W) At different temperatures: • 55° C: 474 W • 40° C: 417 W • 25° C: 400 W
LEDs	**OK/FAIL** LED, one bicolor: • Steady green—MPC is functioning normally. • Blinking green—MPC is transitioning online or offline. • Red—MPC has failed.

Copyright © 2019, Juniper Networks, Inc.

Related Documentation

- MX Series MPC Overview on page 11
- MPCs Supported by MX Series Routers on page 12
- Junos Continuity Software

MPC2E NG Q

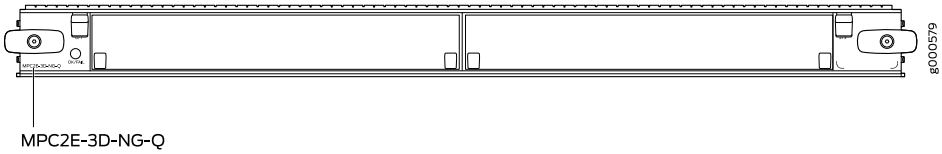

Software release	• Junos OS releases 14.1R4, 14.2R3 and Junos Continuity, Junos OS release 15.1 and later. • Refer to "MIC/MPC Compatibility" on page 26 for information about which MICs are supported on this MPC. • Refer to the JTAC Knowledgebase article https://kb.juniper.net/KB21476 for recommended software releases.
Description	• 80 Gbps capacity with hierarchical quality of service (HQoS) • Requires high-capacity fan trays and high capacity filter trays • Weight: 15.96 lb (7.26 kg) • Model number: MPC2E-3D-NG-Q • Name in the CLI: **MPC2E NG HQoS** NOTE: MPC2E-3D-NG-Q is not compatible with SCB, you must use either SCBE-MX or SCBE2-MX for the switch fabric interface.
Hardware features	• Line-rate throughput of up to 80 Gbps • Supports up to 512,000 queues per slot • Supports WAN-PHY mode at 9.95 Gbps and LAN-PHY mode at 10.31 Gbps • Two slots for MICs • Junos Trio chipsets for increased scaling for bandwidth, subscribers, and services. NOTE: The MPC2E-3D-NG-Q has only one lookup chip (LU). NOTE: MPC2E-3D-NG-Q does not support MIC3-3D-10XGE-SFPP, MIC3-3D-1X100GE-CFP, MIC3-3D-1X100GE-CXP, and MIC3-3D-2X40GE-QSFPP.
Software features	• Chained composite next hops • Layer 3 VPN localization • Detection of Layer 2 loops • Entropy label support in mixed mode • SNMP and CLI support for Routing Engine memory monitoring • BFD support for inline MLPPP/MLFR • Mixed Mode LAG support on core interfaces • Dynamic power management for MICs • See "Protocols and Applications Supported by the MX240, MX480, MX960, MX2010, and MX2020 MPC2E" on page 288 for information about the protocols and applications that this MPC supports.

Power requirement	Maximum with highest-power MICs at 55° C: 11.02 A @ 48 V (529 W) At different temperatures: • 55° C: 529 W • 40° C: 460 W • 25° C: 438 W
LEDs	**OK/FAIL** LED, one bicolor: • Steady green—MPC is functioning normally. • Blinking green—MPC is transitioning online or offline. • Red—MPC has failed.

Copyright © 2019, Juniper Networks, Inc.

Related Documentation

- MX Series MPC Overview on page 11
- MPCs Supported by MX Series Routers on page 12
- Junos Continuity Software

MPC3E

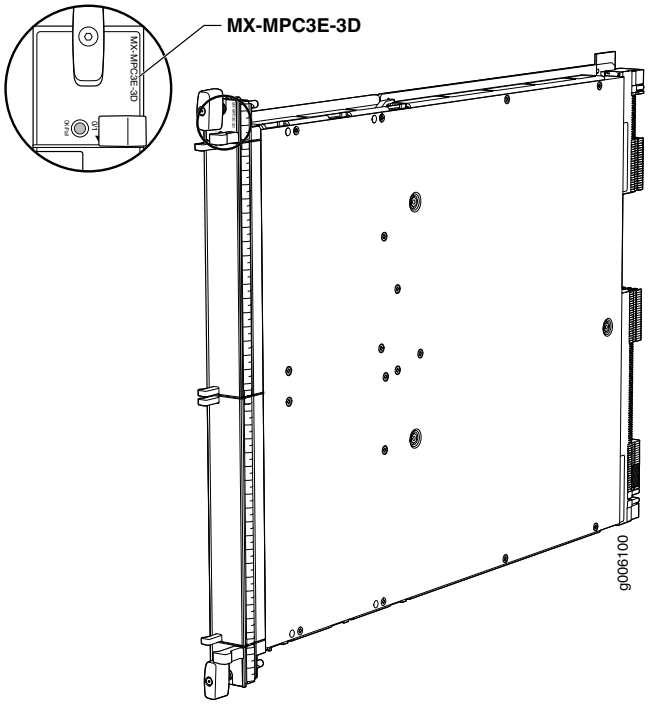

Software release	• MX240, MX480, and MX960 routers : Junos OS Release 12.1 and later • MX2010 and MX2020 router: Junos OS Release 12.3 and later For information on which MICs are supported on this MPC, "MIC/MPC Compatibility" on page 26.
Description	• Power requirement: 10.83 A @ 48 V (440 W; plus 40 W for each of the two MICs) • Requires high-capacity fan trays • Weight: 14.94 lb (6.78 kg) • Model number: MX-MPC3E-3D • Name in the CLI: **MPCE Type 3 3D**
Hardware features	• Two slots for MICs • Chipset for increased scaling for bandwidth, subscribers, and services • Supports maximum transmission unit (MTU) size of 9,192 bytes for host bound packets. For Junos OS 16.1R1 and later releases, the MTU size supported is 9,500 bytes.
Software features	• See "Protocols and Applications Supported by the MPC3E on MX Series Routers" on page 296 for information about the protocols and applications that this MPC supports.

LEDs	**OK/FAIL** LED, one bicolor: • Steady green—MPC is functioning normally. • Blinking green—MPC is transitioning online or offline. • Red—MPC has failed.

Copyright © 2019, Juniper Networks, Inc.

Related Documentation

- MX Series MPC Overview on page 11
- MPCs Supported by MX Series Routers on page 12

MPC3E NG

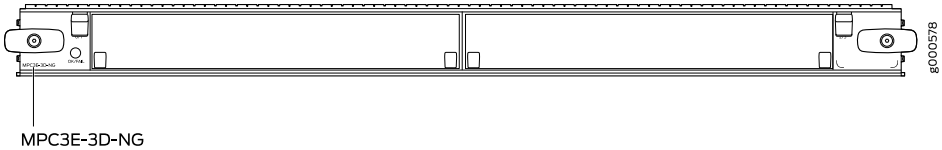

Software release	• Junos OS releases 14.1R4, 14.2R3 and Junos Continuity, Junos OS release 15.1 and later. • Refer to "MIC/MPC Compatibility" on page 26 for information about which MICs are supported on this MPC. • Refer to the JTAC Knowledgebase article https://kb.juniper.net/KB21476 for recommended software releases.
Description	• 130 Gbps capacity without hierarchical quality of service (HQoS) • Requires high-capacity fan trays and high-capacity filter trays • Weight: 15.96 lb (7.26 kg) • Model number: MPC3E-3D-NG • Name in the CLI: **MPC3E NG PQ & Flex Q** • Add-on license provides limited additional flexible queuing. NOTE: MPC3E-3D-NG is not compatible with SCB, you must use either SCBE-MX or SCBE2-MX for the switch fabric interface.
Hardware features	• Line-rate throughput of up to 130 Gbps • Supports WAN-PHY mode at 9.95 Gbps and LAN-PHY mode at 10.31 Gbps • Supports maximum transmission unit (MTU) size of 9,192 bytes for host bound packets. For Junos OS 16.1R1 and later releases, the MTU size supported is 9,500 bytes. • Two slots for MICs • Junos Trio chipsets for increased scaling for bandwidth, subscribers, and services NOTE: The non-HQOS MPC3E NG and MPC2E NG MPCs support MIC-3D-8CHOC3-4CHOC12 and MIC-3D-4CHOC3-2CHOC12 only with a limited queuing license.
Software features	• Chained composite next hops • Layer 3 VPN localization • Detection of Layer 2 loops • Entropy label support in mixed mode • SNMP and CLI support for Routing Engine memory monitoring • Mixed Mode LAG support on core interfaces • Dynamic power management for MICs • Support for flexible-queuing • See "Protocols and Applications Supported by the MPC3E on MX Series Routers" on page 296 for information about the protocols and applications that this MPC supports.

Copyright © 2019, Juniper Networks, Inc.

Power requirement	Maximum with highest-power MICs at 55º C: 11.13 A @ 48 V (534 W) At different temperatures: • 55º C: 534 W • 40º C: 485 W • 25º C: 461 W
LEDs	**OK/FAIL** LED, one bicolor: • Steady green—MPC is functioning normally. • Blinking green—MPC is transitioning online or offline. • Red—MPC has failed.

NOTE: On the MX960 router, FPC slot 0 and slot 11 are not NEBS compliant beyond 104ºF (40ºC) with MPC3E-3D-NG and MPC3E-3D-NG-Q. This is a cooling restriction.

Copyright © 2019, Juniper Networks, Inc.

Related Documentation

- MX Series MPC Overview on page 11
- MPCs Supported by MX Series Routers on page 12
- Junos Continuity Software

MPC3E NG Q

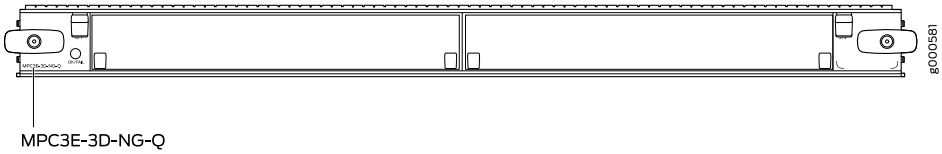

Software release	• Junos OS releases 14.1R4, 14.2R3 and Junos Continuity, Junos OS release 15.1 and later. • Refer to "MIC/MPC Compatibility" on page 26 for information about which MICs are supported on this MPC. • Refer to the JTAC Knowledgebase article https://kb.juniper.net/KB21476 for recommended software releases.
Description	• 130 Gbps capacity with hierarchical quality of service (HQoS) • Requires high-capacity fan trays and high-capacity filter trays • Weight: 15.96 lb (7.26 kg) • Model number: MPC3E-3D-NG-Q • Name in the CLI: **MPC3E NG HQoS** NOTE: MPC3E-3D-NG-Q is not compatible with SCB, you must use either SCBE-MX or SCBE2-MX for the switch fabric interface.
Hardware features	• Line-rate throughput of up to 130 Gbps • Supports up to 512,000 queues per slot • Supports WAN-PHY mode at 9.95 Gbps and LAN-PHY mode at 10.31 Gbps • Supports maximum transmission unit (MTU) size of 9,192 bytes for host bound packets. For Junos OS 16.1R1 and later releases, the MTU size supported is 9,500 bytes. • Two slots for MICs • Junos Trio chipsets for increased scaling for bandwidth, subscribers, and services
Software features	• Chained composite next hops • Layer 3 VPN localization • Detection of Layer 2 loops • Entropy label support in mixed mode • SNMP and CLI support for Routing Engine memory monitoring • BFD support for inline MLPPP/MLFR • Mixed Mode LAG support on core interfaces • Dynamic power management for MICs • See "Protocols and Applications Supported by the MPC3E on MX Series Routers" on page 296 for information about the protocols and applications that this MPC supports. See *MPC3E on MX Series Routers Overview* for additional information.

Power requirement	Maximum with highest-power MICs at 55º C: 12.15 A @ 48 V (583 W) At different temperatures: • 55º C: 583 W • 40º C: 532 W • 25º C: 503 W
LEDs	**OK/FAIL** LED, one bicolor: • Steady green—MPC is functioning normally. • Blinking green—MPC is transitioning online or offline. • Red—MPC has failed.

NOTE: On the MX960 router, FPC slot 0 and slot 11 are not NEBS compliant beyond 104ºF (40ºC) with MPC3E-3D-NG and MPC3E-3D-NG-Q. This is a cooling restriction.

Copyright © 2019, Juniper Networks, Inc.

Related Documentation

- MX Series MPC Overview on page 11
- MPCs Supported by MX Series Routers on page 12
- Junos Continuity Software

32x10GE MPC4E

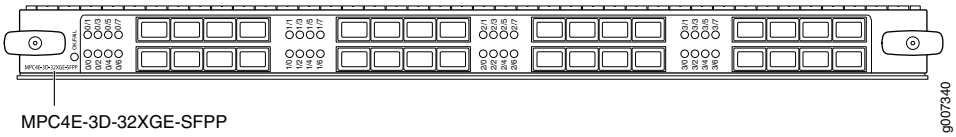

Software release	• Junos OS Release 12.3R2 and later
Description	• Fixed configuration MPC with thirty-two 10-Gigabit Ethernet ports • Power requirement: 12.7 A @ 48 V (610 W) • Weight: 19.4 lb (8.8 kg) • Model number: MPC4E-3D-32XGE-SFPP
Hardware features	• Line-rate throughput of up to 260 Gbps • WAN-PHY mode at 10 Gbps on a per-port basis • Supports maximum transmission unit (MTU) size of 9,192 bytes for host bound packets. For Junos OS 16.1R1 and later releases, the MTU size supported is 9,500 bytes. • Supported on MX2020, MX2010, MX960, MX480, and MX240 routers with both normal-capacity and high-capacity power supplies and fan trays.
Software features	• Optical diagnostics and related alarms • Up to 260 Gbps of full-duplex traffic • Intelligent oversubscription services • Configurable LAN-PHY and WAN-PHY mode options per port • Local loopback • Configurable to interoperate with routers that use the 100-Gigabit Ethernet PIC (Type 4 PIC on Type 4 FPC) • See "Protocols and Applications Supported on the MPC4E for MX Series Routers" on page 303 for information about the protocols and applications that this MPC supports.
Cables and connectors	TIP: You can use the Hardware Compatibility Tool to find information about the pluggable transceivers supported on your Juniper Networks device. The list of supported transceivers for the MX Series is located at https://pathfinder.juniper.net/hct/category/#catKey=100001&modelType;=All&pf;=MX+Series. NOTE: SFPP-10GE-ZR has a commercial temperature rating and is not NEBS compliant when plugged into the 32x10GE MPC4E with SFP+. If the ambient air temperature exceeds 40°C, Junos OS disables the transmitter, which takes the optical transceiver offline. NOTE: SFPP-10G-DT-ZRC2 is not NEBS compliant when plugged into the MPC4E-3D-32XGE-SFPP MPC. If the ambient air temperature exceeds 40°C, Junos OS disables the transmitter, which takes the optical transceiver offline. NOTE: On the MX960 router, FPC slot **0** and FPC slot **11** are not NEBS compliant beyond 104°F (40°C). This is a cooling restriction.

LEDs	**OK/FAIL** LED, one bicolor: • Steady green—MPC is functioning normally. • Blinking green—MPC is transitioning online or offline. • Red—MPC has failed. Enable/disable LED, one bicolor per port: • Green—Port is enabled. • Red—Port has failed. • Off—Port is disabled. The enable/disable LEDs are arranged in four groups: • **0/0** through **0/7** • **1/0** through **1/7** • **2/0** through **2/7** • **3/0** through **3/7**

Related Documentation

- MX Series MPC Overview on page 11
- *MPC4E on MX Series Routers Overview*
- MPCs Supported by MX Series Routers on page 12
- *Configuring MPC4E (MPC4E-3D-2CGE-8XGE) to Interoperate with 100-Gigabit Ethernet PICs on Type 4 FPC Using SA Multicast Mode*

2x100GE + 8x10GE MPC4E

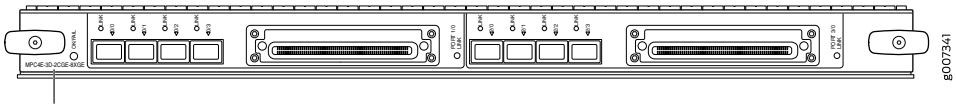

MPC4E-3D-2CGE-8XGE

Software release	• Junos OS Release 12.3R2 and later
Description	• Fixed configuration MPC with two 100-Gigabit Ethernet ports and eight 10-Gigabit Ethernet ports • Power requirement: 12.7 A @ 48 V (610 W) • Weight: 19.4 lb (8.8 kg) • Model number: MPC4E-3D-2CGE-8XGE

Copyright © 2019, Juniper Networks, Inc.

Hardware features	• Line-rate throughput of up to 260 Gbps
	• WAN-PHY mode at 10 Gbps on a per-port basis
	• Supported only on the MX960, MX480, and MX240 routers with high-capacity power supplies and high-capacity fan trays.
	• Supports maximum transmission unit (MTU) size of 9,192 bytes for host bound packets. For Junos OS 16.1R1 and later releases, the MTU size supported is 9,500 bytes.
	• The ports are labeled as:
	  ◦ 10-Gigabit Ethernet ports: **0/0** through **0/3**
	  ◦ 100-Gigabit Ethernet ports: **PORT 1/0**
	  ◦ 10-Gigabit Ethernet ports: **2/0** through **2/3**
	  ◦ 100-Gigabit Ethernet ports: **PORT 3/0**

Software features	• Optical diagnostics and related alarms • Configurable LAN-PHY and WAN-PHY mode options per 10-Gigabit Ethernet port • Up to 260 Gbps of full-duplex traffic • Intelligent oversubscription services • Local loopback • Configurable to interoperate with routers that use the 100-Gigabit Ethernet PIC (Type 4 PIC on Type 4 FPC) • See "Protocols and Applications Supported on the MPC4E for MX Series Routers" on page 303 for information about the protocols and applications that this MPC supports.
Cables and connectors	TIP: You can use the Hardware Compatibility Tool to find information about the pluggable transceivers supported on your Juniper Networks device. The list of supported transceivers for the MX Series is located at https://pathfinder.juniper.net/hct/category/#catKey=100001&modelType;=All&pf;=MX+Series. NOTE: SFPP-10GE-ZR has a commercial temperature rating and is not NEBS compliant when plugged into the 2x100GE + 8x10GE MPC4E. If the ambient air temperature exceeds 40ºC, Junos OS disables the transmitter, which takes the optical transceiver offline. NOTE: SFPP-10G-DT-ZRC2 is not NEBS compliant when plugged into the MPC4E-3D-2CGE-8XGE MPC. If the ambient air temperature exceeds 40ºC, Junos OS disables the transmitter, which takes the optical transceiver offline. NOTE: CFP-100GBASE-LR4 and CFP-100GBASE-ZR are not NEBS compliant when plugged into the 2x100GE + 8x10GE MPC4E. If the ambient air temperature exceeds 40ºC, the software disables the transmitter, which takes the optical transceiver offline. NOTE: On the MX960 router, FPC slot **0** and FPC slot **11** are not NEBS compliant beyond 104ºF (40ºC). This is a cooling restriction.
LEDs	**OK/FAIL** LED, one bicolor: • Steady green—MPC is functioning normally. • Blinking green—MPC is transitioning online or offline. • Red—MPC has failed. **LINK** LED, one tricolor per port: • Green—Port is enabled. • Red—Port has failed. • Yellow—Port is disabled by configuration. • Off—Port is disabled.

Copyright © 2019, Juniper Networks, Inc.

Related Documentation

- MX Series MPC Overview on page 11
- *MPC4E on MX Series Routers Overview*
- MPCs Supported by MX Series Routers on page 12
- *Configuring MPC4E (MPC4E-3D-2CGE-8XGE) to Interoperate with 100-Gigabit Ethernet PICs on Type 4 FPC Using SA Multicast Mode*

6x40GE + 24x10GE MPC5E

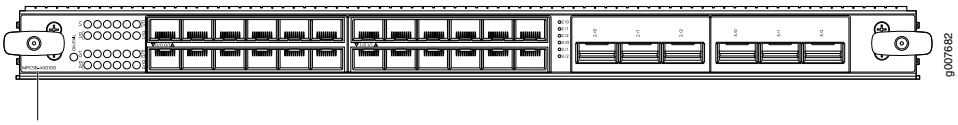

MPC5E-40G10G

Software release	• Junos OS Release 13.3R2 and later
Description	• Fixed-port MPC with six 40-Gigabit Ethernet ports and twenty-four 10-Gigabit Ethernet ports • Weight: 21 lb (9.52 kg) • Model number: MPC5E-40G10G • Name in the CLI: **MPC5E 3D 24XGE+6XLGE**

Hardware features	• Line-rate throughput of up to 240 Gbps
	• Supports one of the following port combinations:
	  ◦ Six 40-Gigabit Ethernet ports
	  ◦ Twenty-four 10-Gigabit Ethernet ports
	  ◦ Three 40-Gigabit Ethernet ports and twelve 10-Gigabit Ethernet ports
	• Supports up to 32,000 queues per-slot
	• LAN-PHY mode at 10.3125 Gbps on a per-port basis
	• WAN-PHY mode at 9.95328 Gbps on a per-port basis
	• Supports maximum transmission unit (MTU) size of 9,192 bytes for host bound packets. For Junos OS 16.1R1 and later releases, the MTU size supported is 9,500 bytes.
	• The ports are labeled as:
	  ◦ 10-Gigabit Ethernet ports:
	  0/0 through **0/11**
	  1/0 through **1/11**
	  ◦ 40-Gigabit Ethernet ports:
	  2/0 through **2/2**
	  3/0 through **3/2**
	
	NOTE: On MX960 routers, all the MPC slots work with the ambient temperature of up to 40° C. However, when the chassis temperature exceeds 40° C, slots **0** and **11** can work with MPC1s, MPC2s, and the 16x10GE MPC.

Copyright © 2019, Juniper Networks, Inc.

Software features	• Optical diagnostics and related alarms • Support for optical transport network (OTN) on 10-Gigabit Ethernet ports • Two packet-forwarding engines, PFE0 and PFE1. PFE0 hosts PIC0 and PIC2. PFE1 hosts PIC1 and PIC3. • Configurable LAN-PHY and WAN-PHY mode options per 10-Gigabit Ethernet port • See "Protocols and Applications Supported by the MPC5E for MX Series Routers" on page 311 for information about the protocols and applications that this MPC supports. NOTE: On MX240, MX480, and MX960 routers, MPC5E powers on only if the **network-services** mode on the router is configured to either **enhanced-ip** or **enhanced-ethernet**. On MX2010 and MX2020 routers, only **enhanced-ip** is supported. NOTE: A maximum of two PICs can be powered on at any one time (PIC0 or PIC2, and PIC1 or PIC3). The other PICs must be powered off.
Cables and connectors	TIP: You can use the Hardware Compatibility Tool to find information about the pluggable transceivers supported on your Juniper Networks device. The list of supported transceivers for the MX Series is located at https://pathfinder.juniper.net/hct/category/#catKey=100001&modelType;=All&pf;=MX+Series. NOTE: QSFPP-40GE-LX4 is not NEBS compliant on the MX960 router in FPC slot 0 or FPC slot 11.
Power requirements	• Typical: 9.68 A @ 48 V (460 W) • At different temperatures with default configuration: 55° C: 558 W 40° C: 496 W 25° C: 469 W • At different temperatures when **flexible-queueing-mode** CLI knob is configured under **set chassis fpc 1 flexible-queuing-mode**: 55° C: 607 W 40° C: 541 W 25° C: 511 W
LEDs	**OK/FAIL** LED, one bicolor: • Steady green—MPC is functioning normally. • Blinking green—MPC is transitioning online or offline. • Red—MPC has failed. 10-Gigabit Ethernet **LINK** LED, one green per port: • Green—Link is up. • Off—Link is down or disabled. 40-Gigabit Ethernet **LINK** LED, one bicolor per port: • Green—Link is up. • Yellow—Link is disabled. • Off—Link is down.

Related Documentation

- MX Series MPC Overview on page 11

- MPCs Supported by MX Series Routers on page 12
- *MPC5E on MX Series Routers Overview*
- *10-Gigabit Ethernet OTN Options Configuration Overview*

6x40GE + 24x10GE MPC5EQ

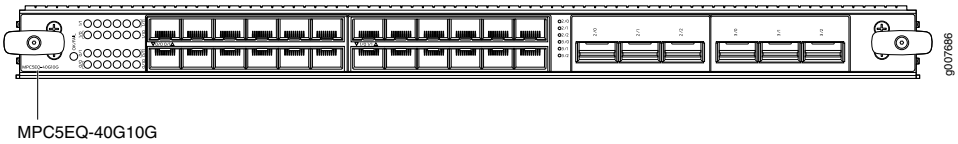

Software release	• Junos OS Release 13.3R2 and later
Description	• Fixed-configuration MPC with six 40-Gigabit Ethernet ports and twenty-four 10-Gigabit Ethernet ports • Weight: 21 lb (9.52 kg) • Model number: MPC5EQ-40G10G • Name in the CLI: **MPC5E 3D Q 24XGE+6XLGE**

Hardware features	• Line-rate throughput of up to 240 Gbps
	• Supports one of the following port combinations:
	  ◦ Six 40-Gigabit Ethernet ports
	  ◦ Twenty-four 10-Gigabit Ethernet ports
	  ◦ Three 40-Gigabit Ethernet ports and twelve 10-Gigabit Ethernet ports
	• Supports up to 1 million queues per-slot
	• LAN-PHY mode at 10.3125 Gbps on a per-port basis
	• WAN-PHY mode at 9.95328 Gbps on a per-port basis
	• Supports maximum transmission unit (MTU) size of 9,192 bytes for host bound packets. For Junos OS 16.1R1 and later releases, the MTU size supported is 9,500 bytes.
	• The ports are labeled as:
	  ◦ 10-Gigabit Ethernet ports:
	  0/0 through **0/11**
	  1/0 through **1/11**
	  ◦ 40-Gigabit Ethernet ports:
	  2/0 through **2/2**
	  3/0 through **3/2**
	
	NOTE: On MX960 routers, all the MPC slots work with the ambient temperature of up to 40° C. However, when the chassis temperature exceeds 40° C, slots **0** and **11** can work with MPC1s, MPC2s, and the 16x10GE MPC.

Copyright © 2019, Juniper Networks, Inc.

Software features	• Supports hierarchical QoS (HQoS) • Optical diagnostics and related alarms • Support for optical transport network (OTN) on 10-Gigabit Ethernet ports • Configurable LAN-PHY and WAN-PHY mode options per 10-Gigabit Ethernet port • Intelligent oversubscription services • See "Protocols and Applications Supported by the MPC5E for MX Series Routers" on page 311 for information about the protocols and applications that this MPC supports. NOTE: On MX240, MX480, and MX960 routers, MPC5E powers on only if the **network-services** mode on the router is configured to either **enhanced-ip** or **enhanced-ethernet**. On MX2010 and MX2020 routers, only **enhanced-ip** is supported.
Cables and connectors	TIP: You can use the Hardware Compatibility Tool to find information about the pluggable transceivers supported on your Juniper Networks device. The list of supported transceivers for the MX Series is located at https://pathfinder.juniper.net/hct/category/#catKey=100001&modelType;=All&pf;=MX+Series. NOTE: QSFPP-40GE-LX4 is not NEBS compliant on the MX960 router in FPC slot 0 or FPC slot 11.
Power requirements	• Typical: 9.68 A @ 48 V (460 W) • At different temperatures: 55º C: 607 W 40º C: 541 W 25º C: 511 W
LEDs	**OK/FAIL** LED, one bicolor: • Steady green—MPC is functioning normally. • Blinking green—MPC is transitioning online or offline. • Red—MPC has failed. 10-Gigabit Ethernet **LINK** LED, one green per port: • Green—Link is up. • Off—Link is down or disabled. 40-Gigabit Ethernet **LINK** LED, one bicolor per port: • Green—Link is up. • Yellow—Link is disabled. • Off—Link is down.

Related Documentation

- MX Series MPC Overview on page 11
- MPCs Supported by MX Series Routers on page 12
- *MPC5E on MX Series Routers Overview*
- *10-Gigabit Ethernet OTN Options Configuration Overview*

2x100GE + 4x10GE MPC5E

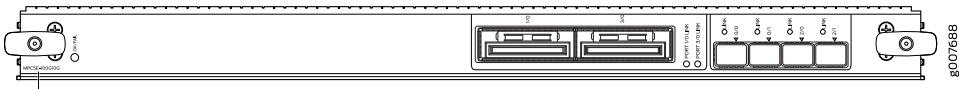

MPC5E-100G10G

Software release	• Junos OS Release 13.3R3 and later
Description	• Fixed-configuration MPC with two 100-Gigabit Ethernet ports and four 10-Gigabit Ethernet ports • Weight: 21 lb (9.52 kg) • Model number: MPC5E-100G10G • Name in the CLI: **MPC5E 3D 2CGE+4XGE**

Hardware features	• Line-rate throughput of up to 240 Gbps
	• Supports up to 32,000 queues per-slot
	• LAN-PHY mode at 10.3125 Gbps on a per-port basis
	• WAN-PHY mode at 9.95328 Gbps on a per-port basis
	• Supports maximum transmission unit (MTU) size of 9,192 bytes for host bound packets. For Junos OS 16.1R1 and later releases, the MTU size supported is 9,500 bytes.
	• The ports are labeled as:
	  ◦ 10-Gigabit Ethernet ports: **0/0**, **0/1**, **2/0**, and **2/1**
	  ◦ 100-Gigabit Ethernet ports: **1/0** and **3/0**
	
	NOTE: On MX960 routers, all the MPC slots work with the ambient temperature of up to 40° C. However, when the chassis temperature exceeds 40° C, slots **0** and **11** can work with MPC1s, MPC2s, and the 16x10GE MPC.

Software features	• Configurable LAN-PHY and WAN-PHY mode options per 10-Gigabit Ethernet port • Optical diagnostics and related alarms • Intelligent oversubscription services • See "Protocols and Applications Supported by the MPC5E for MX Series Routers" on page 311 for information about the protocols and applications that this MPC supports. NOTE: On MX240, MX480, and MX960 routers, MPC5E powers on only if the **network-services** mode on the router is configured to either **enhanced-ip** or **enhanced-ethernet**. On MX2010 and MX2020 routers, only **enhanced-ip** is supported.
Cables and connectors	TIP: You can use the Hardware Compatibility Tool to find information about the pluggable transceivers supported on your Juniper Networks device. The list of supported transceivers for the MX Series is located at https://pathfinder.juniper.net/hct/category/#catKey=100001&modelType;=All&pf;=MX+Series. NOTE: • CFP2-100G-ER4-D is not NEBS compliant on the MX960 router in FPC slot **0** or FPC slot **11**. • CFP2-DCO-T-WDM-1 is not NEBS compliant on the MX960 router or the MX2020 router in FPC slot 0 or FPC slot 11. Slots **0** and **11** can only work with an ambient temperature of up to 40° C.

Copyright © 2019, Juniper Networks, Inc.

Power requirements	• Typical: 10.52 A @ 48 V (505 W) • At different temperatures: 55º C: 607 W 40º C: 541 W 25º C: 511 W
LEDs	**OK/FAIL** LED, one bicolor: • Steady green—MPC is functioning normally. • Blinking green—MPC is transitioning online or offline. • Red—MPC has failed. 10-Gigabit Ethernet **LINK** LED, one bicolor per port: • Green—Link is up. • Yellow—Link is disabled. • Off—Link is down or disabled. 100-Gigabit Ethernet **LINK** LED, one bicolor per port: • Green—Link is up. • Yellow—Link is disabled. • Off—Link is down.

Related Documentation

- MX Series MPC Overview on page 11
- MPCs Supported by MX Series Routers on page 12
- *MPC5E on MX Series Routers Overview*
- *10-Gigabit Ethernet OTN Options Configuration Overview*
- *100-Gigabit Ethernet OTN Options Configuration Overview*

2x100GE + 4x10GE MPC5EQ

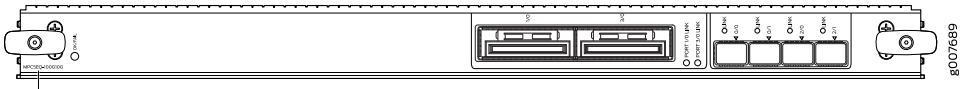

MPC5EQ-100G10G

Software release	• Junos OS Release 13.3R3 and later
Description	• Fixed-configuration MPC with two 100-Gigabit Ethernet ports and four 10-Gigabit Ethernet ports • Weight: 21 lb (9.52 kg) • Model number: MPC5EQ-100G10G • Name in the CLI: **MPC5E 3D Q 2CGE+4XGE**

Hardware features	• Line rate throughput of up to 240 Gbps
	• Supports up to 1 million queues per-slot
	• LAN-PHY mode at 10.3125 Gbps on a per-port basis
	• WAN-PHY mode at 9.95328 Gbps on a per-port basis
	• Supports maximum transmission unit (MTU) size of 9,192 bytes for host bound packets. For Junos OS 16.1R1 and later releases, the MTU size supported is 9,500 bytes.
	• The ports are labeled as:
	  ◦ 10-Gigabit Ethernet ports: **0/0**, **0/1**, **2/0**, and **2/1**
	  ◦ 100-Gigabit Ethernet ports: **1/0** and **3/0**
	
	NOTE: On MX960 routers, all the MPC slots work with the ambient temperature of up to 40° C. However, when the chassis temperature exceeds 40° C, slots **0** and **11** can work with MPC1s, MPC2s, and the 16x10GE MPC.

Software features	• Supports hierarchical QoS (HQoS) • Configurable LAN-PHY and WAN-PHY mode options per 10-Gigabit Ethernet port • Optical diagnostics and related alarms • Intelligent oversubscription services • See "Protocols and Applications Supported by the MPC5E for MX Series Routers" on page 311 for information about the protocols and applications that this MPC supports. NOTE: On MX240, MX480, and MX960 routers, MPC5E powers on only if the **network-services** mode on the router is configured to either **enhanced-ip** or **enhanced-ethernet**. On MX2010 and MX2020 routers, only **enhanced-ip** is supported.
Cables and connectors	TIP: You can use the Hardware Compatibility Tool to find information about the pluggable transceivers supported on your Juniper Networks device. The list of supported transceivers for the MX Series is located at https://pathfinder.juniper.net/hct/category/#catKey=100001&modelType;=All&pf;=MX+Series. NOTE: • CFP2-100G-ER4-D is not NEBS compliant on the MX960 router in FPC slot **0** or FPC slot **11**. • CFP2-DCO-T-WDM-1 is not NEBS compliant on the MX960 router or the MX2020 router in FPC slot 0 or FPC slot 11. Slots **0** and **11** can only work with an ambient temperature of up to 40° C.

Power requirements	• Typical: 10.52 A @ 48 V (505 W)
	• At different temperatures:
	  55° C: 607 W
	  40° C: 541 W
	  25° C: 511 W

Copyright © 2019, Juniper Networks, Inc.

LEDs	**OK/FAIL** LED, one bicolor: • Steady green—MPC is functioning normally. • Blinking green—MPC is transitioning online or offline. • Red—MPC has failed. 10-Gigabit Ethernet **LINK** LED, one bicolor per port: • Green—Link is up. • Yellow—Link is disabled. • Off—Link is down or disabled. 100-Gigabit Ethernet **LINK** LED, one bicolor per port: • Green—Link is up. • Yellow—Link is disabled. • Off—Link is down.

Related Documentation

- MX Series MPC Overview on page 11
- MPCs Supported by MX Series Routers on page 12
- *MPC5E on MX Series Routers Overview*
- *10-Gigabit Ethernet OTN Options Configuration Overview*
- *100-Gigabit Ethernet OTN Options Configuration Overview*

MPC6E

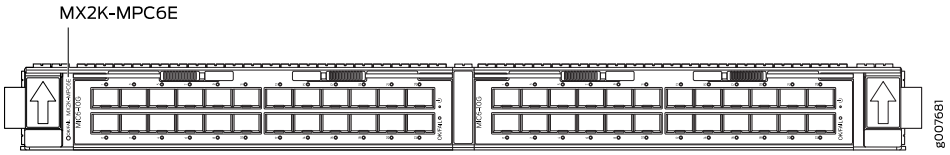

Software release	• Junos OS Release 13.3R2 and later For information about which MICs are supported on this MPC, "MIC/MPC Compatibility" on page 26.
Description	• Two slots for MICs • Weight: 27.4 lb (12.43 kg) (net weight without blank panels) • Model number: MX2K-MPC6E • Name in the CLI: **MPC6E 3D**
Hardware features	• Two slots for MICs • Line-rate throughput of up to 480 Gbps • Field-removable septum, to accommodate future full-height MICs • Supports maximum transmission unit (MTU) size of 9,192 bytes for host bound packets. For Junos OS 16.1R1 and later releases, the MTU size supported is 9,500 bytes.

Maximum Power Requirements	Power requirement: 20.9 A @ 52 V (880 W; plus 104 W for each MIC) MX2K-MPC6E: • Typical: 648 W • 880 W at 55° C • 834 W at 40° C • 824 W at 25° C
Software features	• Optical diagnostics and related alarms • Configurable LAN-PHY and WAN-PHY mode options per 10-Gigabit Ethernet port • Two Packet Forwarding Engines for each MIC slot • Intelligent oversubscription services • See "Protocols and Applications Supported by the MPC6E for MX2000 Routers" on page 317 for information about the protocols and applications that this MPC supports.
LEDs	**OK/FAIL** LED, one bicolor: • Steady green—MPC is functioning normally. • Blinking green—MPC is transitioning online or offline. • Red—MPC has failed. **LINK** LED, one bicolor per port: • Green—Link is up. • Yellow—Link is disabled. • Off—Link is down.

Related Documentation

- MX Series MPC Overview on page 11
- MPCs Supported by MX Series Routers on page 12
- *MPC6E on MX Series Routers Overview*

MPC7E (Multi-Rate)

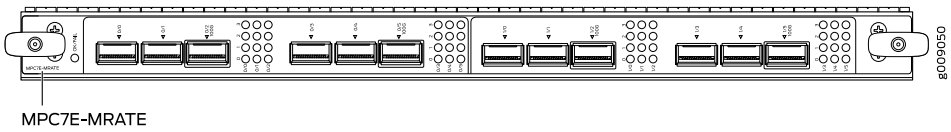

Software release	• Junos OS Release 15.1F4 with Junos Continuity. • Junos OS Release 15.1F6 and later. • Junos OS release 16.1R1 and later.
Description	• Fixed-configuration MPC with 10-Gbps, 40-Gbps, and 100-Gbps port speeds • Weight: 15.7 lb (7.12 kg) • Model number: MPC7E-MRATE • Name in the CLI: **MPC7E-MRATE**

Copyright © 2019, Juniper Networks, Inc.

Hardware features	• Line-rate throughput of up to 480 Gbps on MX240, MX480, and MX960 routers.
	• Line-rate throughput of up to 400 Gbps on MX2000 routers with SFB, and up to 430 Gbps on MX2000 routers with SFB2.
	• Junos Trio chipsets for increased scaling for bandwidth, subscribers, and services
	• Twelve Gigabit Ethernet ports that can be configured as 40-Gigabit Ethernet port or as 4 10-Gigabit Ethernet port using a breakout cable. The ports support quad small-form factor pluggable plus (QSFP+) transceivers.
	• Four out of the twelve ports can be configured as 100-Gigabit Ethernet ports. Port numbers **0/2**, **0/5**, **1/2** and **1/5** are the four 100-Gigabit Ethernet ports.
	• You can configure different combination of port speeds as long as the aggregate capacity per group of six ports labeled **0/0** through **0/5** does not exceed 240 Gbps. Similarly, aggregate capacity per group of the other six ports labeled **1/0** through **1/5** should not exceed 240 Gbps.
	• Requires high-capacity power supplies, high-capacity fan trays, and SCBE2 on MX240, MX480, and MX960 routers.
	• Requires an adapter card to be housed in MX2000 routers.
	• The ports are labeled as (with the MPC orientation as shown in the above figure):
	  ◦ 10-Gigabit Ethernet or 40-Gigabit Ethernet ports:
	  0/0, **0/1**, **0/2 100G**, **0/3**, **0/4**, **0/5 100G**, **1/0**, **1/1**, **1/2 100G**, **1/3**, **1/4**, and **1/5 100G**
	  ◦ 100-Gigabit Ethernet ports:
	  0/2 100G, **0/5 100G**, **1/2 100G** and **1/5 100G**
	
	NOTE: Only ports marked **100G** support 100-Gigabit Ethernet speed using QSFP28 transceivers.
	
	• Supports maximum transmission units (MTUs) from 256 bytes through 16,000 bytes for transit traffic, and from 256 bytes through 9,500 bytes for host bound packets.
	
	NOTE: On MX960 routers, all the MPC slots can be occupied by MPC7E (Multi-Rate) at an ambient temperature of up to 40° C and at any altitude. All the MPC slots can be occupied by MPC7E (Multi-Rate) at temperatures of up to 55° C and at sea level. At an ambient temperature of 55° C and above, and at an altitude above sea level, slot **11** cannot host MPC7E (Multi-Rate).

Software features	• Supports rate selectability at the port level. • By default, the ports are configured as 10-Gigabit Ethernet ports. • Optical diagnostics and related alarms • See "Protocols and Applications Supported by the MPC7E for MX Series Routers" on page 324 for information about the protocols and applications that the MPC7E supports. NOTE: On MX240, MX480, and MX960 routers, MPC7E powers on only if the **network-services** mode on the router is configured as either **enhanced-ip** or **enhanced-ethernet**. On MX2000 router no additional configuration is required as by default the router operates in **enhanced-ip** mode.
Cables and connectors	TIP: You can use the Hardware Compatibility Tool to find information about the pluggable transceivers supported on your Juniper Networks device. The list of supported transceivers for the MX Series is located at https://pathfinder.juniper.net/hct/category/#catKey=100001&modelType;=All&pf;=MX+Series.

Power requirements	• At different temperatures:
	  55° C: 545 W
	  40° C: 465 W
	  25° C: 440 W

LEDs	**OK/FAIL** LED, one bicolor: • Steady green—MPC is functioning normally. • Yellow—MPC has failed. **LINK** LED, one green per port (4 per QSFP+ cage): • Steady green—Link is up. • Off—Link is down or disabled.

Related Documentation

- *MPC7E (Multi-Rate) on MX Series Routers Overview*
- MX Series MPC Overview on page 11
- MPCs Supported by MX Series Routers on page 12
- *Junos Continuity Software User Guide (Junos OS Release 14.1R4 and Later Releases)*

MPC7E 10G

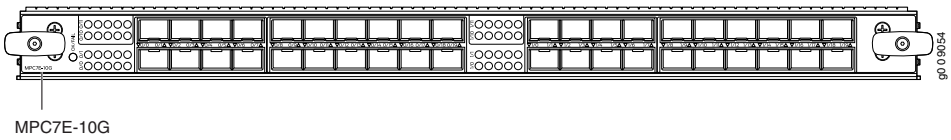

Software release	• Junos OS Release 15.1F5 with Junos Continuity • Junos OS release 16.1R1 and later
Description	• Fixed-configuration MPC with forty 10-Gbps ports • Weight: 17 lb (7.7 kg) • Model number: MPC7E-10G • Name in the CLI: **MPC7E 3D 40XGE**

Hardware features	• Line-rate throughput of up to 400 Gbps on MX240, MX480, and MX960 routers.
	• Line-rate throughput of up to 400 Gbps on MX2000 routers.
	• Junos Trio chipsets for increased scaling for bandwidth, subscribers, and services.
	• Forty 10-Gigabit Ethernet ports. The ports support SFP+ transceivers.
	• Requires high-capacity power supplies, high-capacity fan trays, and SCBE2 on MX240, MX480, and MX960 routers.
	• Requires an adapter card to be housed in MX2000 routers.
	• Supports maximum transmission units (MTUs) from 256 bytes through 16,000 bytes for transit traffic, and from 256 bytes through 9,500 bytes for host bound packets.
	• The ports are labeled as (with the MPC orientation as shown in the figure):
	  ◦ **0/0** through **0/9**
	  ◦ **0/10** through **0/19**
	  ◦ **1/0** through **1/9**
	  ◦ **1/10** through **1/19**

Copyright © 2019, Juniper Networks, Inc.

Software features	• Supports MACsec using the following encryption algorithms: gcm-aes-128 and gcm-aes-256. • SupportsHyper mode to speed up packet processing. • Supports Flexible queuing using an add-on license to support 32,000 queues per line card, including queues on both ingress and egress interfaces. You can use an additional license to support up to 512,000 queues. • Optical diagnostics and related alarms • See "Protocols and Applications Supported by the MPC7E for MX Series Routers" on page 324 for information about the protocols and applications that MPC7Es support. NOTE: On MX240, MX480, and MX960 routers, MPC7E powers on only if the **network-services** mode on the router is configured as either **enhanced-ip** or **enhanced-ethernet**. On MX2000 routers, no additional configuration is required because by default the router operates in **enhanced-ip** mode.
Cables and connectors	TIP: You can use the Hardware Compatibility Tool to find information about the pluggable transceivers supported on your Juniper Networks device. The list of supported transceivers for the MX Series is located at https://pathfinder.juniper.net/hct/category/#catKey=100001&modelType;=All&pf;=MX+Series. • 10GBASE-ZR (model number: SFPP-10G-ZR-OTN-XT) NOTE: MPC7E 10G does not support OTN rates. • 10GBASE-ZR (model number: SFPP-10G-DT-ZRC2) NOTE: • Supported from Junos OS release 16.1R1 and later. • Supports 40° C ambient temperature operation at any altitude, and 55° C ambient temperature operation at sea level.
Power requirements	• Typical: 405 W • At different temperatures: 55° C: 500 W 40° C: 465 W 25° C: 430 W NOTE: On MX960 routers, all the MPC slots can be occupied by MPC7E 10G at an ambient temperature of up to 40° C and at any altitude. All the MPC slots can be occupied by MPC7E 10G at temperatures of up to 55° C and at sea level. At an ambient temperature of 55° C and above, and at an altitude above sea level, slot **11** cannot host MPC7E 10G.
LEDs	**OK/FAIL** LED, one bicolor: • Steady green—MPC is functioning normally. • Yellow—MPC has failed. Link LED, one green per port: • Steady green—Link is up. • Off—Link is down or disabled.

Related Documentation

- *MPC7E 10G on MX Series Routers Overview*
- MX Series MPC Overview on page 11
- MPCs Supported by MX Series Routers on page 12
- *Junos Continuity Software User Guide (Junos OS Release 14.1R4 and Later Releases)*

Copyright © 2019, Juniper Networks, Inc.

MPC8E

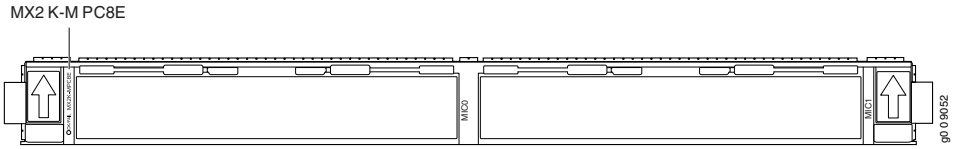

Software release	• Junos OS Release 15.1F5 with Junos Continuity • Junos OS release 16.1R1 and later
Description	• Weight: 31.4 lb (14.24 kg) (net weight without blank panels) • Model number: MX2K-MPC8E • Name in the CLI: **MPC8E 3D**
Hardware features	• Line-rate throughput of up to 960 Gbps on the MX2000 routers. • Line-rate throughput of up to 1600 Gbps (1.6 Tbps) on the MX2000 routers with software upgrade. NOTE: Starting from Junos OS Release 16.1R1, you can upgrade MPC8E to provide an increased bandwidth of 1600 Gbps (1.6 Tbps) by using an add-on license. After you perform the upgrade, MPC8E provides a bandwidth of 1.6 Tbps, which is equivalent to the bandwidth of "MPC9E" on page 135. However, the MPC continues to be identified as MPC8E. • Four Packet Forwarding Engines, each providing a maximum bandwidth of 240 Gbps in normal mode and 400 Gbps in 1.6Tbps upgraded mode. A license is required to operate in 1.6 Tbps upgraded mode. • Supports two MICs. For information about which MICs are supported on this MPC, see "MIC/MPC Compatibility" on page 26. • Junos Trio chipsets for increased scaling for bandwidth, subscribers, and services. • Supports the Switch Fabric Boards SFB and SFB2. When MPC8E is used with SFB, the line-rate throughput is limited to 800 Gbps. • Supports maximum transmission units (MTUs) from 256 bytes through 16,000 bytes for transit traffic, and from 256 bytes through 9,500 bytes for host bound packets.
Software features	• Dynamic power management for effective utilization of available power. • Inline flow monitoring for higher scalability and performance. • Flexible queuing using an add-on license to support 32,000 queues per line card, including queues on both ingress and egress interfaces. You can use an additional license to support up to 512,000 queues per slot or 1,000,000 queues per slot. • Hyper mode to speed up packet processing. • Optical diagnostics and related alarms. For more information about features supported on MPC8E, see "Protocols and Applications Supported by the MPC8E and MPC9E on the MX2010 and MX2020 Routers" on page 333.

Copyright © 2019, Juniper Networks, Inc.

Power requirements (without MICs)	Normal mode with line-rate throughput of 960 Gbps: • Typical: 688 W • At different temperatures: 55° C: 805 W 40° C: 720 W 25° C: 690 W Upgrade mode with line-rate throughput of 1.6 Tbps: • Typical: 838 W • At different temperatures: 55° C: 1018 W 40° C: 870 W 25° C: 840 W
LEDs	**OK/FAIL** LED, one bicolor: • Steady green—MPC is functioning normally. • Yellow—MPC has failed.

Related Documentation

- *MPC8E on MX Series Routers Overview*
- MX Series MPC Overview on page 11
- MPCs Supported by MX Series Routers on page 12
- *Junos Continuity Software User Guide (Junos OS Release 14.1R4 and Later Releases)*
- *Understanding Rate Selectability*

MPC9E

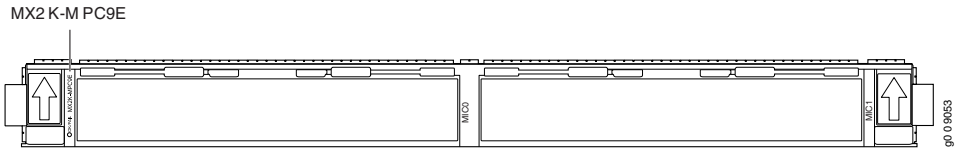

Software release	• Junos OS Release 15.1F5 with Junos Continuity • Junos OS release 16.1R1 and later
Description	• Weight: 31.4 lb (14.24 kg) (net weight without blank panels) • Model number: MX2K-MPC9E • Name in the CLI: **MPC9E 3D**

Hardware features	• Line-rate throughput of up to 1600 Gbps (1.6 Tbps) on MX2000 routers. • Four Packet Forwarding Engines, each providing a maximum bandwidth of 400 Gbps. • Supports two MICs. For information about which MICs are supported on this MPC, see "MIC/MPC Compatibility" on page 26. • Junos Trio chipsets for increased scaling for bandwidth, subscribers, and services • Supports the Switch Fabric Boards SFB and SFB2. When MPC9E is used with SFB, the line-rate throughput is limited to 800 Gbps. • Supports maximum transmission units (MTUs) from 256 bytes through 16,000 bytes for transit traffic, and from 256 bytes through 9,500 bytes for host bound packets.
Software features	• *Understanding How Dynamic Power Management Enables Better Utilization of Power* for effective utilization of available power. • *Inline Active Flow Monitoring* for higher scalability and performance. • *Flexible Queuing Mode* using an add-on license to support 32,000 queues per line card, including queues on both ingress and egress interfaces. You can use an additional license to support up to 512,000 queues per slot or 1,000,000 queues per slot. • *Hyper Mode* to speed up packet processing. • Optical diagnostics and related alarms. For more information about features supported on MPC9E, see "Protocols and Applications Supported by the MPC8E and MPC9E on the MX2010 and MX2020 Routers" on page 333.
Power requirements (without MICs)	• Typical: 838 W • At different temperatures: 55° C: 1018 W 40° C: 870 W 25° C: 840 W
LEDs	**OK/FAIL** LED, one bicolor: • Steady green—MPC is functioning normally. • Yellow—MPC has failed.

Related Documentation

- *MPC9E on MX Series Routers Overview*
- MX Series MPC Overview on page 11
- MPCs Supported by MX Series Routers on page 12
- *Junos Continuity Software User Guide (Junos OS Release 14.1R4 and Later Releases)*
- *Understanding Rate Selectability*

Copyright © 2019, Juniper Networks, Inc.

MPC10E-15C-MRATE

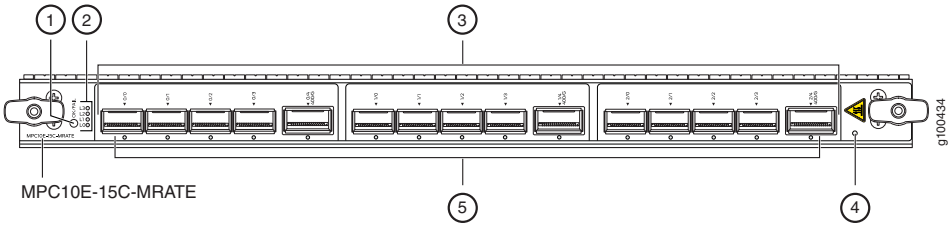

1—OK/FAIL LED	4—Physical Presence button
2—Lane LEDs	5—Port LEDs
3—Network ports	

Software release	Junos OS Release 19.1R1 and later
Description	• Weight: 20.4 lb (9.25 Kg) • Model number: MPC10E-15C-MRATE • Name in the CLI: **MPC10E 3D MRATE-15xQSFPP**

Hardware features	• Fixed-configuration MPC with 10-Gbps, 40-Gbps, and 100-Gbps port speeds.
	• Line-rate throughput of up to 1.5 Tbps on MX240, MX480, and MX960 5G Universal Routing Platforms when installed with an enhanced midplane. If you are running Junos OS Release 19.1R1, you must have an enhanced midplane installed.
	NOTE: In the CLI, when you run the **show chassis hardware** command, the midplane description will say **Enhanced <platform> Backplane**.
	• Line-rate throughput of up to 800 Gbps on MX240, MX480, and MX960 routers when installed with a standard midplane. Support for the standard midplane starts in Junos OS Release 19.2R1.
	NOTE: In the CLI when you run the **show chassis hardware** command, the midplane description will say **<platform> Backplane**.
	• To achieve maximum line-rate performance, the MPC's fabric redundancy mode must be configured in increased bandwidth mode.
	• The Processor Mezzanine Board (PMB) consists of a 1.6-GHz Intel Broadwell 8-core CPU, 100-GB SATA SSD, and two 16-GB ECC DDR4 DRAM modules.
	• Three Packet Forwarding Engines, each providing a maximum bandwidth of 500 Gbps.
	• ZT chipset for increased scaling for bandwidth, subscribers, and services.
	• To achieve maximum performance, the following number of SCBE3-MX switch control boards must be installed in the system:
	  • MX960—3 SCBE3-MX
	  • MX240 and MX480—2 SCBE3-MX
	• Requires high-capacity power supplies and high-capacity fan trays used in MX Series routers.
	• Supports maximum transmission units (MTUs) from 256 bytes through 16,000 bytes for transit traffic, and from 256 bytes through 9500 bytes for host-bound packets.
	• Contains the following port types:
	  • QSFP28 ports—Port numbers 0/0 through 0/3, 1/0 through 1/3, and 2/0 through 2/3 (10-Gbps, 40-Gbps, and 100-Gbps port speeds supported).
	  • QSFP56-DD ports—Port numbers 0/4, 1/4, and 2/4 (10-Gbps, 40-Gbps, and 100-Gbps port speeds supported).
	NOTE: On MX960 routers, the MPC10E-15C-MRATE is not supported in the line-card slots numbered 0, 1, and 11.

Software features	• Media Access Control Security is supported on 10-Gbps, 40-Gbps, and 100-Gbps port speeds. See *Understanding Media Access Control Security (MACsec)*. • Security Support: ◦ *Secure Boot* For more information about features supported on MPC10E, see "Protocols and Applications Supported by the MPC10E" on page 356.
Power requirements	The power numbers are measured using the following configuration: • IPv4 forwarding with 200-bytes packet size. • Line-rate traffic on all ports for 1.5 Tbps aggregate bandwidth. • All fifteen ports are configured for 100-Gigabet Ethernet, with a QSFP28 LR4 transceiver installed on all ports. At different temperatures: • 104º F (40º C): 785 W • 77º F (25º C): 720 W
LEDs	**OK/FAIL** LED, one bicolor: • Green—MPC is functioning normally. • Red—MPC has failed. Port LED: • Off—Port link is down with loss of signal. • Green—Port link is up with no alarms or failures. • Amber—Port link is down with alarms. Or the port has been administratively disabled through the CLI. • Red—A transceiver on the port is experiencing a fault. Lane LED: When a QSP28 port is configured for the 10-Gigabit mode with a breakout cable, the link status for a 10-Gigabit port is indicated with the addition of 4 LEDs provided on the line card. The lane LEDs for the corresponding 10-Gigabit ports indicate the port status. Like the port status LED, each individual lane LED support four states: off, green, amber, and red. See *MPC and MIC Lane LED Scheme Overview* for more details. For the 40-Gigabit and 100-Gigabit mode, the lane LEDs are not applicable. The port LED indicates the port status irrespective of whichever lane number the LED is on.
Cables and connectors	TIP: You can use the Hardware Compatibility Tool to find information about the pluggable transceivers supported on your Juniper Networks device. The list of supported transceivers for the MX Series is located at MX Series Supported Transceivers.

Copyright © 2019, Juniper Networks, Inc.

MX10003 MPC (Multi-Rate)

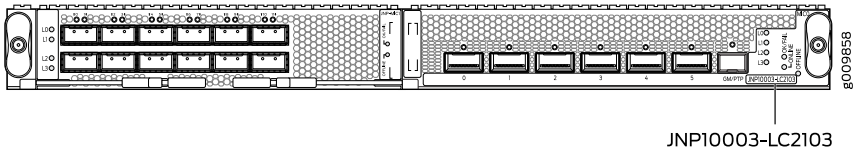

Software release	• Junos OS release 17.3R1 and later
Description	• Weight: 30 lb (13.61 kg) (net weight without blank panel and without any MIC in slot 1) • Model number: MX10003-LC2103 • Power requirement: 715 W at 55º C 660 W at 25º C • Name in the CLI: **LC2103**
Hardware features	• The MX10003 MPC is a 1.2-Terabit capable MPC with three Packet Forwarding Engine complexes (that is, three EA ASICs). The EA ASIC operates in 400G mode. • The Packet Forwarding Engine is based on the third generation of the Trio chpiset architecture---namely, the EA (Eagle) ASIC. The Packet Forwarding Engine offers 400 Gbps of WAN and fabric bandwidth each. • MX10003 MPC has six built-in QSFP+ optics ports, and one MIC slot. • Supports Multi-Rate Ethernet Modular Interface Card (MIC) (model numbers: JNP-MIC1 and JNP-MIC1-MACSEC), and the fixed-port PIC (6xQSFPP). For information about which MICs are supported on this MPC, see "MIC/MPC Compatibility" on page 26. • Supports maximum transmission units (MTUs) from 256 bytes through 16,000 bytes for transit traffic, and from 256 bytes through 9,500 bytes for host bound packets.
Software features	• *Dynamic Power Management* for effective utilization of available power. • *Inline Active Flow Monitoring* for higher scalability and performance. • *Flexible Queuing Mode* to support 32,000 queues per line card, including queues on both ingress and egress interfaces. Supports up to 512,000 queues per slot or 768,000 queues per slot. • *Hyper Mode* to speed up packet processing. • Optical diagnostics and related alarms. For more information about features supported on MX10003 MPC, see "Protocols and Applications Supported by the MX10003 MPC (Multi-Rate) on the MX10003 Router" on page 342.
Cables and connectors	TIP: You can use the Hardware Compatibility Tool to find information about the pluggable transceivers supported on your Juniper Networks device. The list of supported transceivers for the MX Series is located at https://pathfinder.juniper.net/hct/category/#catKey=100001&modelType;=All&pf;=MX+Series.
Power requirements (without MICs)	• At different temperatures: 55º C: 715 W 25º C: 660 W

LEDs

OK/FAIL LED, one bicolor:

- Steady green—MPC is functioning normally and the link is up.
- Off—MPC is plugged-in but not powered on.
- Red—MPC has failed.

For information on the lane LEDs (**Lo**, **L1**, **L2**, and **L3**), see *MPC and MIC Lane LED Scheme Overview*.

Table 23 on page 140 summarize the port speed capability of MX10003 MPCs.

Table 23: MX10003 MPC (Multi-Rate) Port Speed

MIC	Port Number	Port Speed Supported
PIC 0	0-5	40 Gigabit Ethernet 4X10-Gigabit Ethernet
PIC 1	0-11	100 Gigabit Ethernet 40 Gigabit Ethernet 4X10-Gigabit Ethernet

Related Documentation

- *MPC and MIC Lane LED Scheme Overview*
- *Configuring Rate Selectability on MX10003 MPC to Enable Different Port Speeds*
- *MX10003 MPC Rate-Selectability Overview*
- *Understanding Interface Naming Conventions for MX10003 MPC*
- *Understanding Rate Selectability*
- MX Series MPC Overview on page 11
- MPCs Supported by MX Series Routers on page 12
- *Replacing an MX10003 MIC*

Line card (MX10K-LC2101)

The MX10K-LC2101 line card is a fixed configuration MPC and it does not contain separate slots for Modular Interface Cards (MICs). The MX10008 routers support eight

Copyright © 2019, Juniper Networks, Inc.

MX10K-LC2101 MPCs.The line card provides a maximum bandwidth of 2.4Tbps and has six Packet Forwarding Engines, each providing a maximum bandwidth of up to 400 Gbps.

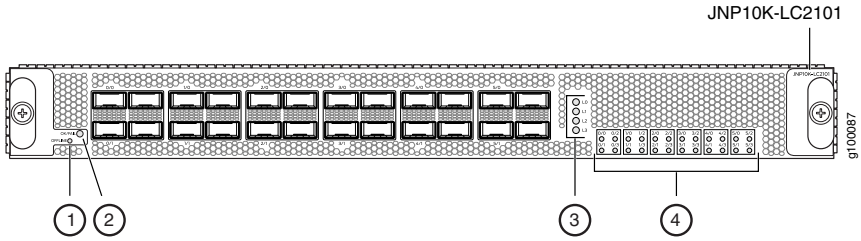

1—**OFFLINE** button	3—Lane LEDs
2—**OK/FAIL** LED	4—Port LEDs

Software release	Junos OS Release 18.2R1 and later
Description	• Weight: 31.57 lb (14.32 kg) • Model number: JNP10K-LC2101 • Name in the CLI: **JNP10K-LC2101** • Dimensions: Height = 1.89 in. (48.01 mm), Width = 17.2 in (436.88 mm), Depth = 19.05 in. (484 mm) (Excluding FRU Ejector)
Hardware features	• Fixed-configuration MPC with 10-Gbps, 40-Gbps, and 100-Gbps port speeds. • All the ports are multi-rate ports. Each port is capable of supporting either 100 Gbps or 40 Gbps or 10 Gbps (4x10-Gbps with breakout cable). • Line-rate throughput of up to 2.4 Tbps. • Six Packet Forwarding Engines, each providing a maximum bandwidth of 400 Gbps. • EA chipsets for increased scaling for bandwidth, subscribers, and services. • Supports the Switch Fabric Boards, JNP10008-SF and JNP10016-SF. • Supports maximum transmission units (MTUs) from 256 bytes through 16,000 bytes for transit traffic, and from 256 bytes through 9,500 bytes for host bound packets.
Software features	• Supports rate selectability at the port level. • By default, the ports are configured as 10-Gigabit Ethernet ports. • Optical diagnostics and related alarms.
Power requirements	Line-rate throughput of 4.0 Tbps: • Power consumption at different temperatures: 25° C: 1335 W 40° C: 1425 W

LEDs	**OK/FAIL** LED: • Steady green—MPC is functioning normally. • Yellow—MPC has failed. Port LED—**Link** • Off—Port is not enabled. • Green—Port link is up with no alarms or failures. • Red—Port link is down with alarms. NOTE: When a QSFP+ port is configured for the 10-Gigabit mode with a breakout cable, the link status for the 10-Gigabit port is indicated with the addition of four LEDs provided on the line card. The lane LEDs for the corresponding port indicates the port status. Like the port status LED, each individual lane LED support four states as: OFF, AMBER, GREEN, RED. See *MPC and MIC Lane LED Scheme Overview* for more details. For the 40-Gigabit mode the lane number LED is not applicable. The port LED indicates the port status, irrespective of whichever lane number LED is ON.
Cables and connectors	TIP: You can use the Hardware Compatibility Tool to find information about the pluggable transceivers supported on your Juniper Networks device. The list of supported transceivers for the MX Series is located at: MX Series Supported Transceivers.

Copyright © 2019, Juniper Networks, Inc.

CHAPTER 9

MX Series MIC Descriptions

- ATM MIC with SFP on page 144
- DS3/E3 MIC on page 147
- Gigabit Ethernet MIC with SFP on page 151
- Gigabit Ethernet MIC with SFP (E) on page 154
- Gigabit Ethernet MIC with SFP (EH) on page 158
- 10-Gigabit Ethernet MICs with XFP on page 159
- 10-Gigabit Ethernet MIC with SFP+ (10 Ports) on page 162
- 10-Gigabit Ethernet MIC with SFP+ (24 Ports) on page 164
- 10-Gigabit Ethernet OTN MIC with SFP+ (24 Ports) on page 165
- 40-Gigabit Ethernet MIC with QSFP+ on page 167
- 100-Gigabit Ethernet MIC with CFP on page 168
- 100-Gigabit Ethernet MIC with CXP on page 170
- 100-Gigabit Ethernet MIC with CXP (4 Ports) on page 171
- 100-Gigabit Ethernet MIC with CFP2 on page 172
- 100-Gigabit DWDM OTN MIC with CFP2-ACO on page 174
- Channelized SONET/SDH OC3/STM1 (Multi-Rate) MICs with SFP on page 183
- Channelized OC3/STM1 (Multi-Rate) Circuit Emulation MIC with SFP on page 188
- Channelized OC3/STM1 (Multi-Rate) Circuit Emulation MIC with SFP (H) on page 190
- Channelized E1/T1 Circuit Emulation MIC on page 193
- Channelized E1/T1 Circuit Emulation MIC (H) on page 196
- Tri-Rate MIC on page 199
- MIC MRATE on page 203
- Multiservices MIC on page 205
- SONET/SDH OC3/STM1 (Multi-Rate) MICs with SFP on page 206
- Multi-Rate Ethernet MIC on page 210
- Multi-Rate Ethernet MACSEC MIC on page 213
- SONET/SDH OC192/STM64 MIC with XFP on page 215

Copyright © 2019, Juniper Networks, Inc.

ATM MIC with SFP

Figure 8: 8-Port ATM MIC with SFP

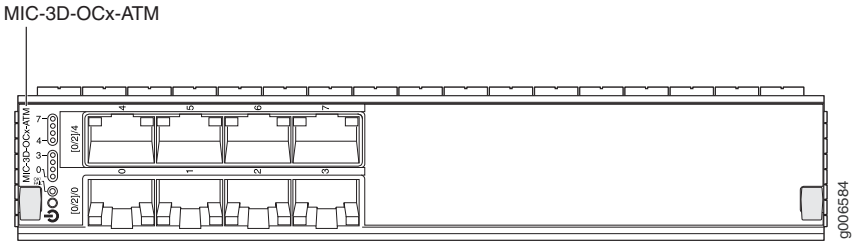

Software release	• Junos 12.1 and later For information on which MPCs support this MIC, see "MIC/MPC Compatibility" on page 26. For information on which MICs are supported on MX Series routers, see "MICs Supported by MX Series Routers" on page 18.

Description	• Rate-selectable using one of the following rates:
	  • 8-port OC3
	  • 2-port OC12
	• Power requirement: 0.73 A @ 48 V (35 W)
	• Weight: 1.2 lb (0.54 kg)
	• Model number: MIC-3D-8OC3-2OC12-ATM
	• Name in the CLI: **3D 8OC3 2OC12 ATM**

Hardware features	• High-performance parsing of SONET/SDH frames • Packet segmentation and reassembly (SAR) management and output port queuing • Packet buffering, Layer 2 parsing • Line rate throughput for each port

Copyright © 2019, Juniper Networks, Inc.

Software features	• Circuit cross-connect (CCC) for leveraging ATM access networks
	• User-configurable virtual circuit (VC) and virtual path (VP) support
	• Support for idle cell or unassigned cell transmission
	• OAM fault management processes alarm indication signal (AIS), remote defect indication (RDI) cells, and loop cells
	• Point-to-point and point-to-multipoint mode Layer 2 counters per VC and per VP
	• Local and remote loopback
	• Simple Network Management Protocol (SNMP):
	  ◦ Management Information Base (MIB) 2 (RFC 1213)
	  ◦ ATM MIB (RFC 1695)
	  ◦ SONET MIB
	  ◦ PWE3 MIB (RFC 5603)
	  ◦ PW-ATM-MIB (RFC 5605)
	  ◦ PW-FRAME-MIB (RFC 5601)
	  ◦ MIB for CoS
	• Unspecified bit rate (UBR), non-real-time variable bit rate (VBR), and constant bit rate (CBR) traffic shaping
	• Per-VC or per-VP traffic shaping
	• Support for F4 OAM cells (AIS, RDI, Loopback, and Continuity Check)
	• Support for F5 OAM cells (AIS, RDI, Loopback, and Continuity Check)
	• Support for 16 bit VCI range
	• Encapsulations:
	  ◦ atm-ccc-cell-relay (Junos 12.1 and later)
	  ◦ atm-ccc-vc-mux (Junos 12.1 and later)
	  ◦ atm-snap (Junos 12.2 and later)
	  ◦ atm-vc-mux (Junos 12.2 and later)
	  ◦ atm-tcc-snap (Junos 13.3 and later)
	  ◦ atm-tcc-vc-mux (Junos 13.3 and later)
	  ◦ vlan-vci-ccc (Junos 16.1 and later)
	  ◦ ether-over-atm-llc
	  ◦ ppp-over-ether-over-atm-llc
	  ◦ atm-ppp-vc-mux
	NOTE: Inline MLPPP is not supported on this MIC.

Cables and connectors	TIP: You can use the Hardware Compatibility Tool to find information about the pluggable transceivers supported on your Juniper Networks device. The list of supported transceivers for the MX Series is located at https://pathfinder.juniper.net/hct/category/#catKey=100001&modelType;=All&pf;=MX+Series.

LEDs	**OK/FAIL** LED, one bicolor: • Green—MIC is functioning normally. • Red—MIC has failed. Link LED, one green per port: • Off—No link. • On steadily—Link is up. • Blinking—Online with alarms for remote failures • Blinking rapidly—Active with a local alarm; router has detected a failure

Alarms, errors, and events	• Alarm indication signal—line (AIS-L)
	• Alarm indication signal—path (AIS-P)
	• Bit error rate—signal degrade (BERR-SD)
	• Bit error rate—signal fail (BERR-SF)
	• Loss of cell delineation (LOC)
	• Loss of frame (LOF)
	• Loss of pointer (LOP-P)
	• Loss of signal (LOS)
	• Payload mismatch (PLM-P)
	• Payload unequipped (unequipped STS at path level) (UNEQ-P)
	• Remote defect indication—line (RDI-L)
	• Remote defect indication—path (RDI-P)
	• Error detection:
	  • Bit interleaved parity errors B1, B2, B3
	  • Errored seconds (ES-S, ES-L, ES-P)
	  • Far-end bit errors, remote error indication—line (REI-L), far-end line coding violations (CV-LFE)
	  • Far-end bit errors, remote error indication—path (REI-P), far-end path coding violations (CV-PFE)
	  • Far-end errored seconds (ES-LFE, ES-PFE)
	  • Far-end severely errored seconds (SES-LFE, SES-PFE)
	  • Far-end unavailable seconds (UAS-LFE, UAS-PFE)
	  • Severely errored framing (SEF)
	  • Severely errored framing seconds (SEFS-S)
	  • Severely errored seconds (SES-S, SES-L, SES-P)
	  • Unavailable seconds (UAS-L, UAS-P)

Copyright © 2019, Juniper Networks, Inc.

NOTE: MIC-3D-8OC3-2OC12-ATM Revision 8 and Revision 22 are supported only by the following Junos OS releases:

- Junos OS Release 12.3—12.3R9 and later
- Junos OS Release 13.3—13.3R6 and later
- Junos OS Release 14.1—14.1R4 and later
- Junos OS Release 14.2—14.2R3 and later
- Junos OS Release 15.1 and later

You must upgrade to a supported Junos OS release to use MIC-3D-8OC3-2OC12-ATM Revision 8 and Revision 22 and later.

Related Documentation

- MX Series MIC Overview on page 17

DS3/E3 MIC

Figure 9: DS3/E3 MIC

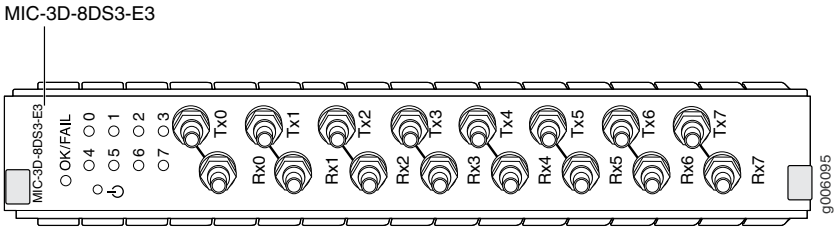

Software release	• Junos OS Release 11.4 and later For information on which MPCs support this MIC, see "MIC/MPC Compatibility" on page 26. For information on which MICs are supported on MX Series routers, see "MICs Supported by MX Series Routers" on page 18.

Description	• Eight E3 or DS3 ports
	• DS3/E3 MIC ports can be configured as one of the following:
	  • 8 clear-channel DS3 ports
	  • 8 channelized DS3 ports
	  • 8 clear-channel E3 ports
	  NOTE: You can upgrade the DS3/E3 MIC with the S-MIC-3D-8CHDS3 software license (purchased separately) to support DS3 channelization. Channelized DS3/E3 MIC is supported only on queuing MPCs. On the MX80 router, you also need an S-MX80-Q software license.
	• DS3 or E3 is configurable on a per-port granularity
	• DS3 channelization for the 8-port Channelized DS3/E3 MIC:
	  • 8 DS3 channels
	  • 224 DS1 channels
	  • 2038 DS0 channels
	• Power requirement: 4.0 A @ 9 V (36W)
	• Weight: 4.4 lb (2 kg)
	• Model numbers:
	  • DS3/E3 MIC: MIC-3D-8DS3-E3
	  • Channelized DS3/E3 MIC: MIC-3D-8CHDS3-E3-B

Hardware features	• Ports are numbered 0 through 7, Tx0 through Tx7 and Rx0 through Rx7

Copyright © 2019, Juniper Networks, Inc.

Software features	• Maximum transmission units (MTUs) of up to 9192 bytes
	• Framing: M13, C-bit parity, framed clear channel
	• Subrate and scrambling:
	NOTE: Only DS3 interfaces support subrate and scrambling.
	  • Digital Link/Quick Eagle
	  • Kentrox
	  • Larscom
	  • ADTRAN
	  • Verilink
	• Internal and look clocking
	• DS3 far-end alarm and control (FEAC) channel
	• Full bit error rate test (BERT) for DS0, DS1, and DS3
	• Encapsulations:
	  • MPLS fast reroute
	  • MPLS CCC (circuit cross-connection)
	  • MPLS TCC (translational cross-connection)
	  • Cisco High-Level Data Link Control (cHDLC)
	  • Cisco HDLC CCC
	  • Cisco HDLC TCC
	  • Point-to-Point Protocol (PPP)
	  • PPP for CCC
	  • PPP for TCC
	  • Flexible Frame Relay
	  • Frame Relay
	  • Frame Relay for CCC
	  • Frame Relay for TCC
	  • PPP over Frame Relay
	NOTE: Ethernet over Frame Relay is not supported.
	• Encapsulations available only for Channelized DS3/E3 MIC (Junos OS Release 12.1 and later):
	  • Multilink Point-to-Point Protocol (MLPPP)
	  • Multiclass MLPPP
	  • Multilink Frame Relay (MLFR) end-to-end (FRF.15)
	  • Multilink Frame Relay (MLFR) UNI NNI (FRF.16, also referred to as MFR)
	  • Compressed Real-Time Transport Protocol (CRTP)
	NOTE: When you configure multilink services on a MIC in an MX Series router, ensure that a Multiservices DPC is present in the same router.

Cables and connectors	TIP: You can use the Hardware Compatibility Tool to find information about the pluggable transceivers supported on your Juniper Networks device. The list of supported transceivers for the MX Series is located at https://pathfinder.juniper.net/hct/category/#catKey=100001&modelType;=All&pf;=MX+Series. • Coaxial: Custom 10-ft (3-m) mini-SMB to BNC cable (model number: CBL-DS3-E3-M-S), set of 8 cables (bundled RX and TX)

LEDs	**OK/FAIL** LED, one bicolor: • Green—MIC is functioning normally • Red—MIC has failed Link LED, one green per port: • Off—Not enabled • Green—Online with no alarms or failures • Yellow—Online with alarms for remote failures • Red—Active with a local alarm; router has detected a failure
Alarms, errors, and events	DS3 alarms: • Alarm indication signal (AIS) • Loss of frame (LOF) • Loss of signal seconds (LOS) • Phase lock loop (PLL) DS3 error detection: • C-bit code violations (CCV) • C-bit errored seconds (CES) • C-bit severely errored seconds (CSES) • CRC errors • Excessive zeros (EXZ) • Far-end block error (FEBE) • Far-end receive failure (FERF) • Line errored seconds (LES) • Parity bit (P-bit) code violations (PCV) • Parity bit (P-bit) errored seconds (PES) • Parity bit (P-bit) severely errored framing seconds (PSES) • Severely errored framing seconds (SEFS) • Unavailable seconds (UAS)

Related Documentation

- MX Series MIC Overview on page 17

Copyright © 2019, Juniper Networks, Inc.

Gigabit Ethernet MIC with SFP

Figure 10: 20-Port Gigabit Ethernet MIC with SFP

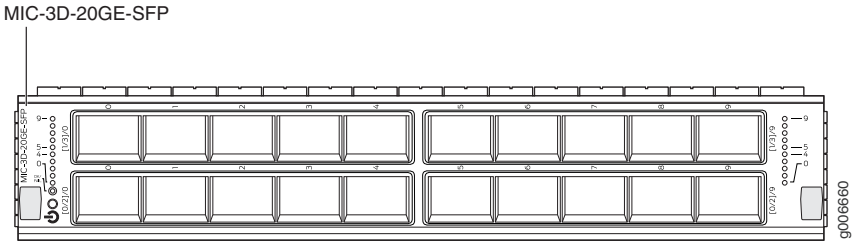

Software release	• Junos 10.1 and later For information on which MPCs support this MIC, see "MIC/MPC Compatibility" on page 26. For information on which MICs are supported on MX Series routers, see "MICs Supported by MX Series Routers" on page 18.
Description	• 20 Gigabit Ethernet ports • Power requirement: 0.77 A @ 48 V (37 W) • Weight: 1.2 lb (0.54 kg) • Model number: MIC-3D-20GE-SFP • Name in the CLI: **3D 20GE SFP**
Hardware features	• High-performance throughput on each port at speeds up to 1 Gbps • Autonegotiation between Gigabit Ethernet circuit partners • Up to 20-Gbps of full-duplex traffic • Maximum transmission units (MTUs) of up to 9192 bytes
Software features	• Optical diagnostics and related alarms • Virtual Router Redundancy Protocol (VRRP) support • IEEE 802.1Q virtual LANs (VLANs) support • Remote monitoring (RMON) EtherStats • Source MAC learning • MAC accounting and policing—Dynamic local address learning of source MAC addresses • Flexible Ethernet encapsulation • Multiple tag protocol identifiers (TPID)
Interfaces	Syntax: ge-*fpc/pic/port* where: • fpc: Slot in the router where the MPC is installed • pic: The logical PIC number on the MIC, numbered 0, 1, 2, and 3. • port: 0 through 9 For example, ge-3/3/0 is the interface for port 0 in PIC 3 on the MPC installed in slot 3. Figure 11 on page 152, Figure 12 on page 153, and Figure 13 on page 153 show examples of the port numbering for the Gigabit Ethernet MIC with SFP installed in an MX960, MX480, and MX240, respectively.

Cables and connectors	TIP: You can use the Hardware Compatibility Tool to find information about the pluggable transceivers supported on your Juniper Networks device. The list of supported transceivers for the MX Series is located at https://pathfinder.juniper.net/hct/category/#catKey=100001&modelType;=All&pf;=MX+Series.
LEDs	**OK/FAIL** LED, one bicolor: • Green—MIC is functioning normally. • Red—MIC has failed. Link LED, one green per port: • Off—No link. • On steadily—Link is up.

Port Numbering

Figure 11 on page 152, Figure 12 on page 153, and Figure 13 on page 153 show examples of the port numbering for the Gigabit Ethernet MIC with SFP on the MX960, MX480, and MX240, respectively.

Figure 11: Port Numbering for the Gigabit Ethernet MIC with SFP (MX960)

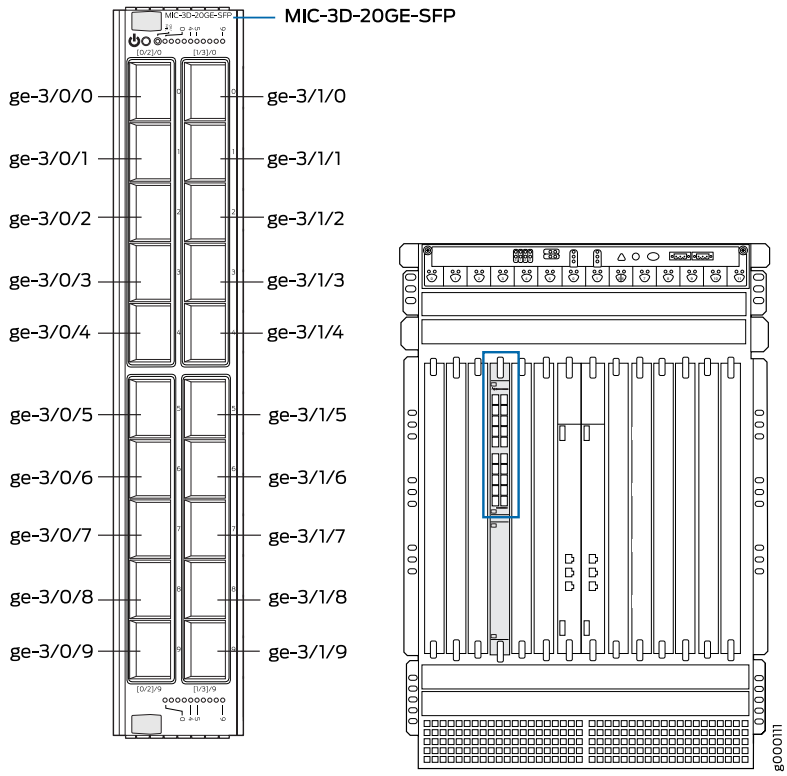

Copyright © 2019, Juniper Networks, Inc.

Figure 12: Port Numbering for the Gigabit Ethernet MIC with SFP (MX480)

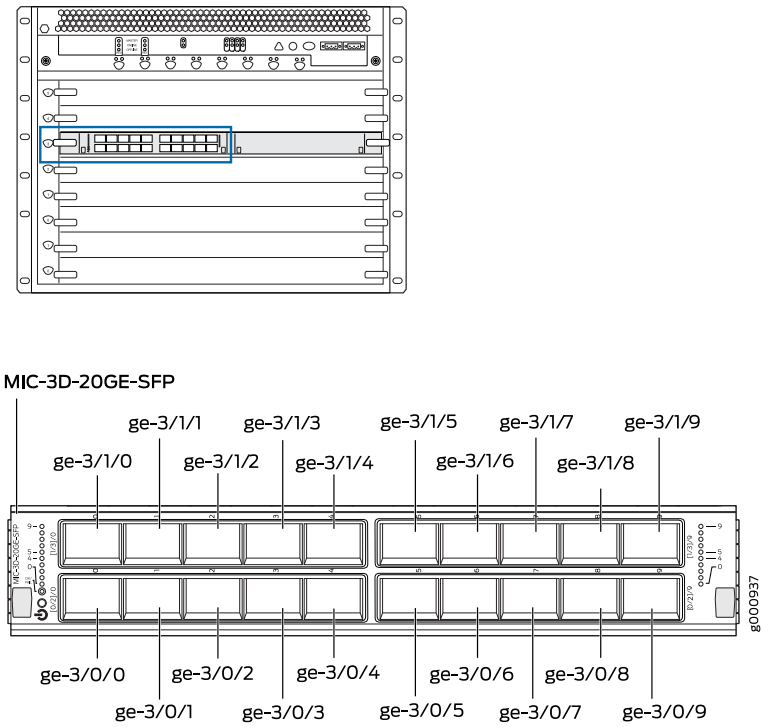

Figure 13: Port Numbering for Gigabit Ethernet MIC with SFP (MX240)

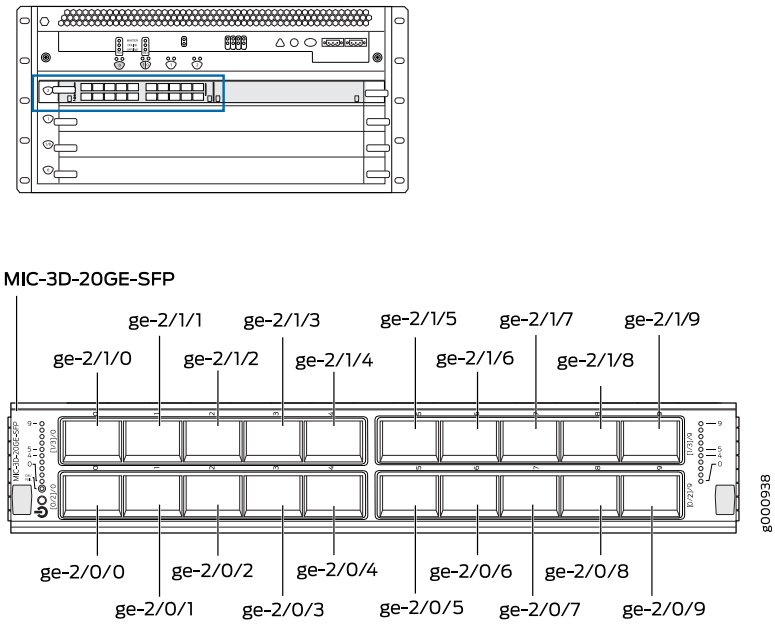

Related Documentation

- MX Series MIC Overview on page 17

Gigabit Ethernet MIC with SFP (E)

Figure 14: 20-Port Gigabit Ethernet MIC with SFP (E)

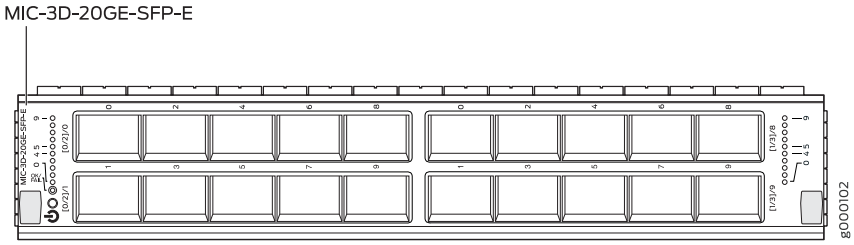

Software release	• Junos 13.2R2 and later For information on which MPCs support this MIC, see "MIC/MPC Compatibility" on page 26. For information on which MICs are supported on MX Series routers, see "MICs Supported by MX Series Routers" on page 18.
Description	• 20 Gigabit Ethernet ports • Power requirement: 0.77 A @ 48 V (37 W) • Weight: 1.2 lb (0.54 kg) • Model number: MIC-3D-20GE-SFP-E • Name in the CLI: **3D 20x 1GE(LAN)-E,SFP**
Hardware features	• High-performance throughput on each port at speeds up to 1 Gbps • Auto-negotiation between Gigabit Ethernet circuit partners • Up to 20-Gbps of full-duplex traffic • Maximum transmission units (MTUs) of up to 9192 bytes • Environmentally hardened for 32° F (0° C) to 131° F (55° C) operating temperatures • SEC PHY • Timing PHY
Software features	• Optical diagnostics and related alarms • Virtual Router Redundancy Protocol (VRRP) support • IEEE 802.1Q virtual LANs (VLANs) support • Remote monitoring (RMON) EtherStats • Source MAC learning • MAC accounting and policing—Dynamic local address learning of source MAC addresses • Flexible Ethernet encapsulation • Multiple tag protocol identifiers (TPID) • Precision Time Protocol (PTP) or IEEE 1588v2 • Media Access Control Security (MACsec)

Copyright © 2019, Juniper Networks, Inc.

Interfaces	Syntax: ge-*fpc/pic/port* where: • fpc: Slot in the router where the MPC is installed. The MPCs are represented in the CLI as **FPC0** through **FPC19**. • pic: The logical PIC number on the MIC, numbered 0 or 1. Figure 15 on page 156, Figure 16 on page 157, and Figure 17 on page 157 illustrate the port numbering for the Gigabit Ethernet MIC with SFP (E) installed in the MX960, MX480, and MX240, respectively. • port: 0 through 9. For example, ge-3/1/0 is the interface for port 0 in PIC 1 on the MPC installed in slot 3. Figure 15 on page 156, Figure 16 on page 157, and Figure 17 on page 157 illustrate the port numbering for the MIC-3D-20GE-SFP-E installed in an MX960, MX480, and MX280, respectively.
Cables and connectors	TIP: You can use the Hardware Compatibility Tool to find information about the pluggable transceivers supported on your Juniper Networks device. The list of supported transceivers for the MX Series is located at https://pathfinder.juniper.net/hct/category/#catKey=100001&modelType;=All&pf;=MX+Series.
LEDs	**OK/FAIL** LED, one bicolor: • Green—MIC is functioning normally. • Red—MIC has failed. Link LED, one green per port: • Off—No link. • On steadily—Link is up.

Figure 15: Port Numbering for the MIC-3D-20GE-SFP-E (MX960)

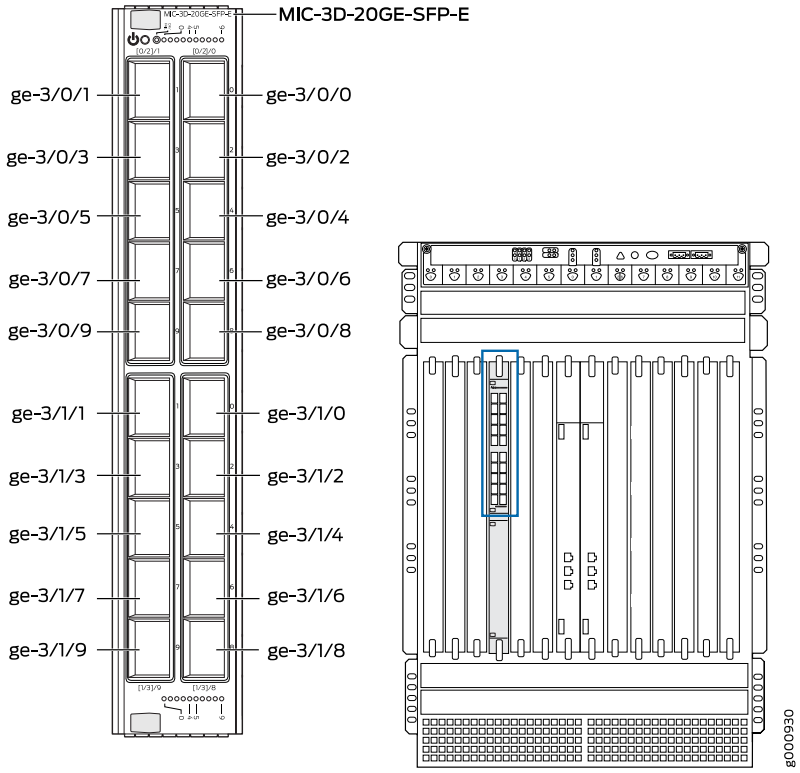

Copyright © 2019, Juniper Networks, Inc.

Figure 16: Port Numbering for the MIC-3D-20GE-SFP-E (MX480)

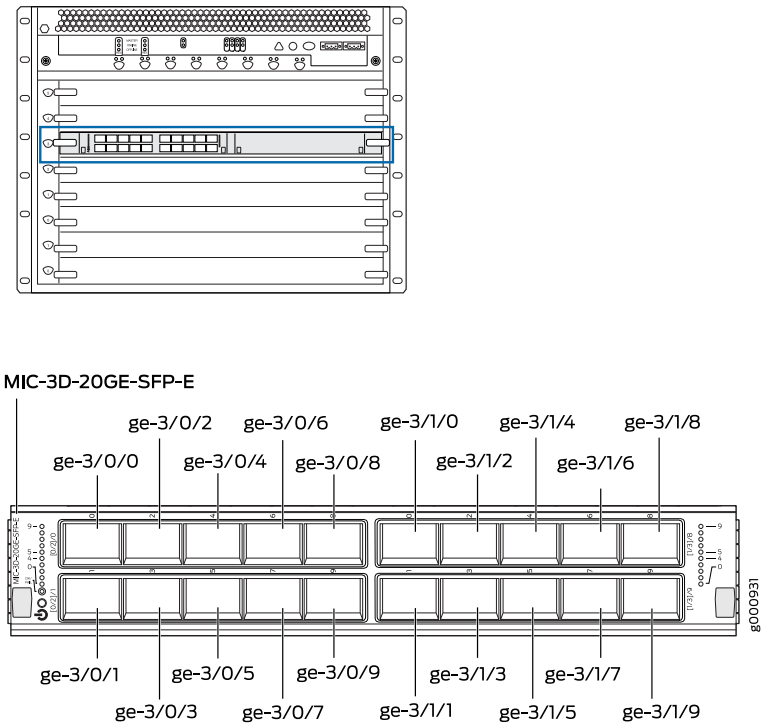

Figure 17: Port Numbering for the MIC-3D-20GE-SFP-E (MX240)

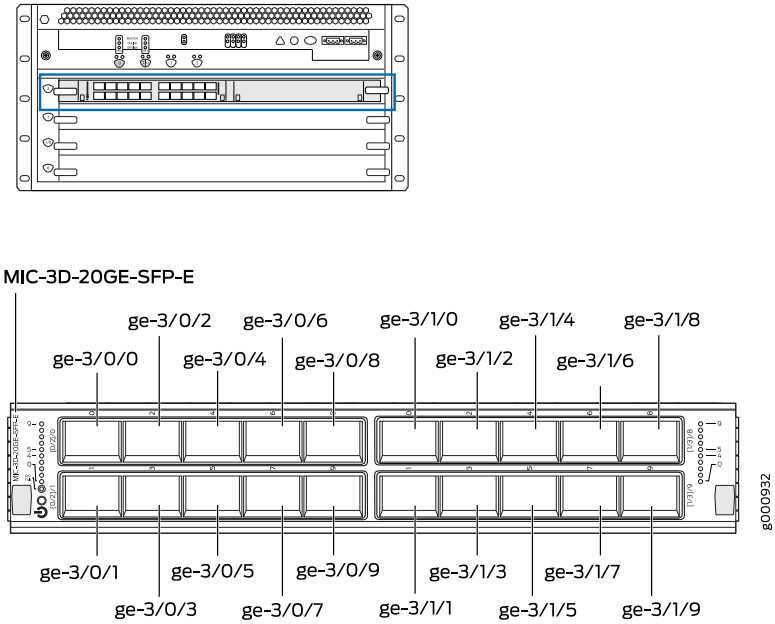

Related Documentation

- MX Series MIC Overview on page 17

Gigabit Ethernet MIC with SFP (EH)

Figure 18: 20-Port Gigabit Ethernet MIC with SFP (EH)

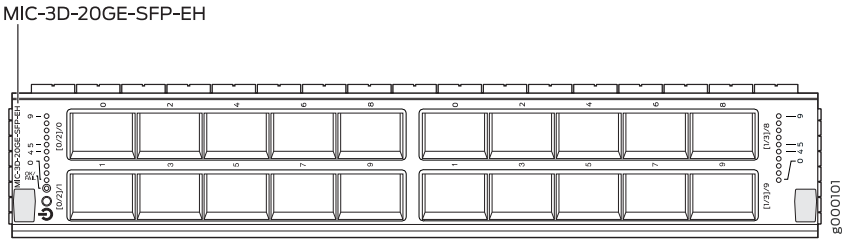

Software release	• Junos 13.2R2 and later For information on which MPCs support this MIC, see "MIC/MPC Compatibility" on page 26. For information on which MICs are supported on MX Series routers, see "MICs Supported by MX Series Routers" on page 18.
Description	• 20 Gigabit Ethernet ports • Power requirement: 0.77 A @ 48 V (37 W) • Weight: 1.2 lb (0.54 kg) • Model number: MIC-3D-20GE-SFP-EH • Name in the CLI: **3D 20x 1GE(LAN)-EH,SFP**
Hardware features	• High-performance throughput on each port at speeds up to 1 Gbps • Autonegotiation between Gigabit Ethernet circuit partners • Up to 20-Gbps of full-duplex traffic • Maximum transmission units (MTUs) of up to 9192 bytes • Environmentally hardened for –40° F (–40° C) to 149° F (65° C) operating temperatures • SEC PHY • Timing PHY
Software features	• Optical diagnostics and related alarms • Virtual Router Redundancy Protocol (VRRP) support • IEEE 802.1Q virtual LANs (VLANs) support • Remote monitoring (RMON) EtherStats • Source MAC learning • MAC accounting and policing—Dynamic local address learning of source MAC addresses • Flexible Ethernet encapsulation • Multiple tag protocol identifiers (TPID) • Precision Time Protocol (PTP) or IEEE 1588v2 • Media Access Control Security (MACsec)

Copyright © 2019, Juniper Networks, Inc.

Interfaces	Syntax: ge-*fpc/pic/port* where: • fpc: Slot in the router where the MPC is installed • pic: 0 (left grouping of 10 ports) or 1 (right grouping of 10 ports) when installed in MIC slot 0; 2 (left grouping of 10 ports) or 3 (right grouping of 10 ports) when installed in MIC slot 1 • port: 0 through 9 For example, ge-1/3/0 is the interface for port 0 in the right grouping of ports on the MIC installed in MIC slot 1 on an MPC installed in slot 1.
Cables and connectors	TIP: You can use the Hardware Compatibility Tool to find information about the pluggable transceivers supported on your Juniper Networks device. The list of supported transceivers for the MX Series is located at https://pathfinder.juniper.net/hct/category/#catKey=100001&modelType;=All&pf;=MX+Series.
LEDs	**OK/FAIL** LED, one bicolor: • Green—MIC is functioning normally. • Red—MIC has failed. Link LED, one green per port: • Off—No link. • On steadily—Link is up.

Related Documentation

- MX Series MIC Overview on page 17

10-Gigabit Ethernet MICs with XFP

Figure 19: 2-Port 10-Gigabit Ethernet MIC with XFP

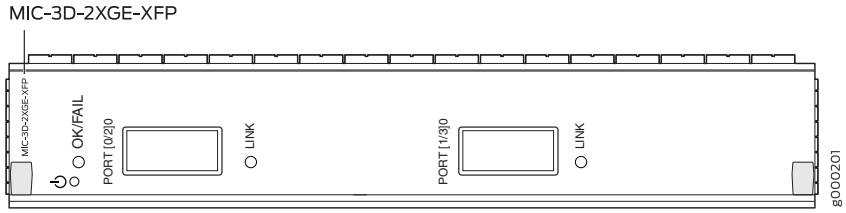

Figure 20: 4-Port 10-Gigabit Ethernet MIC with XFP

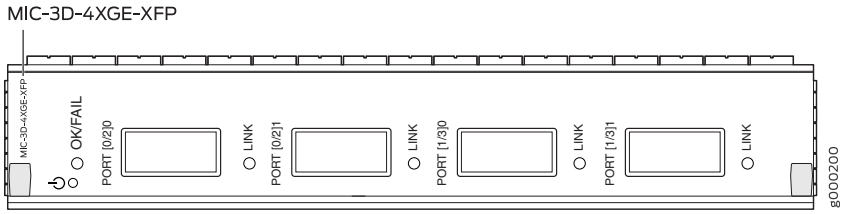

Software release	• 2-port: Junos 10.2 and later • 4-port: Junos 10.1 and later For information on which MPCs support these MICs, see "MIC/MPC Compatibility" on page 26. For information on which MICs are supported on MX Series routers, see "MICs Supported by MX Series Routers" on page 18.

Description	• Two or four 10-Gigabit Ethernet ports
	• Power requirement:
	  • 2-port: 0.6 A @ 48 V (29 W)
	  • 4-port: 0.56 A @ 48 V (27 W)
	• Weight:
	  • 2-port: 1 lb (0.45 kg)
	  • 4-port: 1.1 lb (0.5 kg)
	• Model number:
	  • 2-port: MIC-3D-2XGE-XFP
	  • 4-port: MIC-3D-4XGE-XFP
	• Name in the CLI:
	  • 2-port: **3D 2X10GE XFP**
	  • 4:-port **3D 4X10GE XFP**

Hardware features	• High-performance throughput on each port at speeds up to 10 Gbps • LAN-PHY mode at 10.3125 Gbps • WAN-PHY mode at 9.953 Gbps • Maximum transmission units (MTUs) of up to 9192 bytes
Software features	• Configurable LAN-PHY and WAN-PHY mode options • Synchronous Ethernet support • Optical diagnostics and related alarms • Virtual Router Redundancy Protocol (VRRP) support • IEEE 802.1Q virtual LANs (VLANs) support • Remote monitoring (RMON) EtherStats • Source MAC learning • MAC accounting and policing—Dynamic local address learning of source MAC addresses • Flexible Ethernet encapsulation • Multiple tag protocol identifiers (TPID)

Copyright © 2019, Juniper Networks, Inc.

Interfaces	Syntax: xe-*fpc/pic/port* where:
	• fpc: Slot in the router where the MPC is installed
	• pic:
	  • 2-port: 0 when installed in MIC slot 0; 3 when installed in MIC slot 1
	  • 4-port: 0 or 1 when installed in MIC slot 0; 2 or 3 when installed in MIC slot 1
	• port:
	  • 2-port: 0 or 1
	  • 4-port: 0 or 1
	For example, xe-1/3/0 is the interface for port 0 on the MIC installed in MIC slot 1 on an MPC installed in slot 1.

Cables and connectors	TIP: You can use the Hardware Compatibility Tool to find information about the pluggable transceivers supported on your Juniper Networks device. The list of supported transceivers for the MX Series is located at https://pathfinder.juniper.net/hct/category/#catKey=100001&modelType;=All&pf;=MX+Series.
LEDs	**OK/FAIL** LED, one bicolor: • Green—MIC is functioning normally. • Red—MIC has failed. **LINK** LED, one green per port: • Off—No link. • On steadily—Link is up with or without activity. The ports are labeled (see Figure 21 on page 161 and Figure 22 on page 162). • 2-port: **[0/2]0**, **[1/3]0** • 4-port: **[0/2]0**, **[0/2]1**, **[1/3]0**, and **[1/3]1**

Figure 21: Port Numbering for 2-Port 10-Gigabit Ethernet MIC with XFP

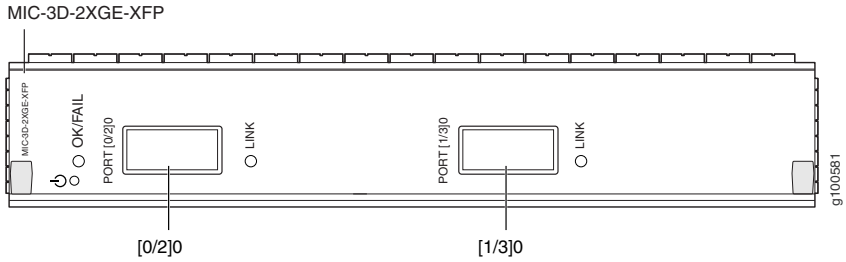

Figure 22: Port Numbering for 4-Port 10-Gigabit Ethernet MIC with XFP

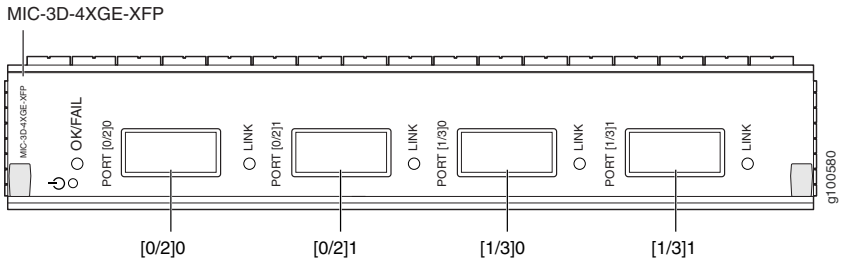

Related Documentation

- MX Series MIC Overview on page 17

10-Gigabit Ethernet MIC with SFP+ (10 Ports)

Figure 23: 10-Gigabit Ethernet MIC with SFP+

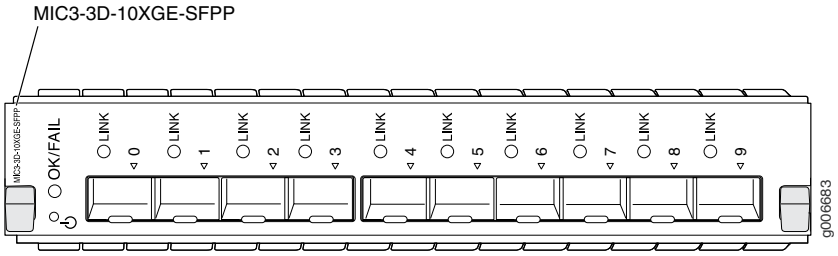

Software release	• Junos 12.3 and later
Description	• Ten 10-Gigabit Ethernet ports • Power requirement: 0.62 A @ 48 V (29.8 W) • Weight: 1.54 lb (0.70 kg) • Model number: MIC3-3D-10XGE-SFPP • Name in the CLI: **3D 10xGE SFPP**
Hardware features	• High-performance throughput on each port at speeds up to 10 Gbps • Supports 10 SFP+ pluggable optic ports • Voltage Sequencer for local voltage sequence control and monitoring • LAN-PHY mode at 10.3125 Gbps • WAN-PHY mode at 9.95328 Gbps • Maximum transmission units (MTUs) of up to 9192 bytes

Copyright © 2019, Juniper Networks, Inc.

Software features	• Configurable LAN-PHY and WAN-PHY mode options per port • Synchronous Ethernet support • Optical diagnostics and related alarms • Virtual Router Redundancy Protocol (VRRP) support • IEEE 802.1Q virtual LANs (VLANs) support • Remote monitoring (RMON) EtherStats • Source MAC learning • MAC accounting and policing—Dynamic local address learning of source MAC addresses • Flexible Ethernet encapsulation • Multiple tag protocol identifiers (TPID)
Cables and connectors	TIP: You can use the Hardware Compatibility Tool to find information about the pluggable transceivers supported on your Juniper Networks device. The list of supported transceivers for the MX Series is located at https://pathfinder.juniper.net/hct/category/#catKey=100001&modelType;=All&pf;=MX+Series. NOTE: SFPP-10GE-ZR has a commercial temperature rating and is not NEBS compliant when plugged into the 10-Gigabit Ethernet MIC with SFP+. If the ambient air temperature exceeds 40 degrees C, the software disables the transmitter, which takes the optical transceiver offline. NOTE: SFPP-10G-DT-ZRC2 is not NEBS compliant when plugged into the MIC3-3D-10XGE-SFPP MIC. If the ambient air temperature exceeds 40 degrees C, Junos OS disables the transmitter, which takes the optical transceiver offline.
LEDs	**OK/FAIL** LED, one bicolor: • Green—MIC is functioning normally. • Red—MIC has failed. **LINK** LED, one per SFP+ port: • Off—No link. • Green—Link is up. • Yellow—Link is disabled. The ports are labeled: • **Port [0]** to **Port [9]**

NOTE: The MIC3-3D-10XGE-SFPP MIC has one logical PIC. When the MIC is installed in slot 0 of an MPC the PIC number is 0, and when the MIC is installed in slot 1 of an MPC the PIC number is 2. For example, when the MIC is installed in slot 3 of the MX960 router, in slot 1 of the MPC, the interfaces are numbered ge-3/2/0 through ge-3/2/9.

Related Documentation

- MX Series MIC Overview on page 17
- MICs Supported by MX Series Routers on page 18
- MIC/MPC Compatibility on page 26

10-Gigabit Ethernet MIC with SFP+ (24 Ports)

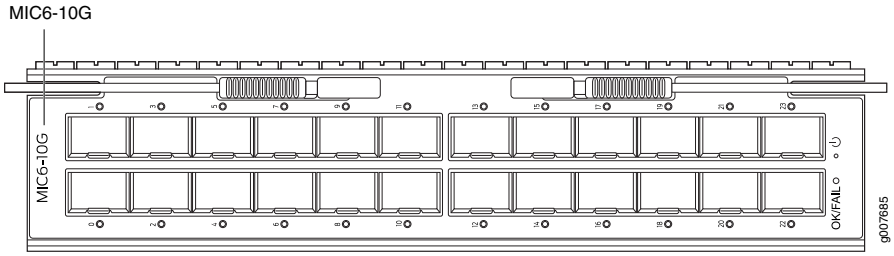

Software release	• Junos 13.3R2 and later For information about which MPCs support this MIC, see "MIC/MPC Compatibility" on page 26. For information about which MICs are supported on MX Series routers, see "MICs Supported by MX Series Routers" on page 18.
Description	• Twenty-four 10-Gigabit Ethernet ports • Power requirement: 7.1 A @ 10.4 V (74 W) • Weight: 3.2 lb (1.45 kg) • Model number: MIC6-10G • Name in the CLI: **24x10GE SFPP**
Hardware features	• Supports 24 SFP+ pluggable optic ports • High-performance throughput on each port at speeds up to 10 Gbps • LAN-PHY mode at 10.3125 Gbps • WAN-PHY mode at 9.95328 Gbps • Supports LOS-squelch, enabling Synchronous Ethernet fast-clock-failover on a port down event • Maximum transmission units (MTUs) of up to 9192 bytes
Software features	• Configurable LAN-PHY and WAN-PHY mode options per port • Compliant to ITU-T specifications • Optical diagnostics and related alarms • Virtual Router Redundancy Protocol (VRRP) support • IEEE 802.1Q virtual LANs (VLANs) support • IEEE 802.1ad support • Remote monitoring (RMON) EtherStats • Source MAC learning • MAC accounting and policing—Dynamic local address learning of source MAC addresses • In-service software upgrade (Unified ISSU)
Cables and connectors	TIP: You can use the Hardware Compatibility Tool to find information about the pluggable transceivers supported on your Juniper Networks device. The list of supported transceivers for the MX Series is located at https://pathfinder.juniper.net/hct/category/#catKey=100001&modelType;=All&pf;=MX+Series.

Copyright © 2019, Juniper Networks, Inc.

LEDs	**OK/FAIL** LED, one bicolor: • Green—MIC is functioning normally. • Yellow—MIC is coming online. • Red—MIC has failed. **LINK** LED, one bicolor per SFP+ port: • Off—No link. • Green—Link is up. • Yellow—Link is disabled. The ports are labeled: • Port **[0]** to Port **[23]**

Related Documentation

- MX Series MIC Overview on page 17

10-Gigabit Ethernet OTN MIC with SFP+ (24 Ports)

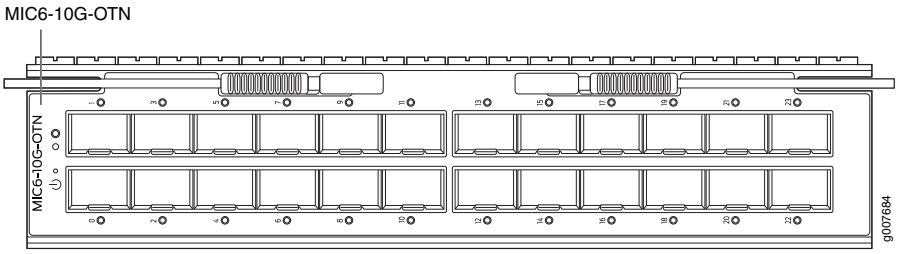

Software release	• Junos 13.3R3 and later For information about which MPCs support this MIC, see "MIC/MPC Compatibility" on page 26. For information about which MICs are supported on MX Series routers, see "MICs Supported by MX Series Routers" on page 18.
Description	• Twenty-four 10-Gigabit optical transport network (OTN) ports for transport of 10-Gigabit Ethernet (10GBASE-R) traffic • Power requirement: 1.5 A @ 52 V (84 W) • Weight: 3.4 lb (1.54 kg) • Model number: MIC6-10G-OTN • Name in the CLI: **24x10GE OTN**
Hardware features	• High-performance throughput on each port at speeds up to 10 Gbps • LAN-OTU2e mode (G.Sup43, 7.1) at 11.09 Gbps • WAN-OTU2 mode (G.Sup43, 6.1) at 10.70 Gbps • Supports LOS-squelch, enabling Synchronous Ethernet fast-clock-failover on a port-down event • Provides IEEE 1588 time-stamping at physical interface for improved accuracy • Maximum transmission units (MTUs) of up to 9192 bytes

Copyright © 2019, Juniper Networks, Inc.

Software features	• OTN support for 10-Gigabit Ethernet interface • Compliant with ITU-T specifications • Transparent transport of 10-Gigabit Ethernet signals with optical channel transport unit 2 (OTU2/OTU2e) framing • Optical diagnostics and related alarms • Configurable LAN-PHY, WAN-PHY, or OTN mode options per port • Virtual Router Redundancy Protocol (VRRP) support • IEEE 802.1Q VLAN support • IEEE 802.1ad support • Remote monitoring (RMON) EtherStats • Source MAC learning • MAC accounting and policing—Dynamic local address learning of source MAC addresses • In-service software upgrade (Unified ISSU)
Cables and connectors	TIP: You can use the Hardware Compatibility Tool to find information about the pluggable transceivers supported on your Juniper Networks device. The list of supported transceivers for the MX Series is located at https://pathfinder.juniper.net/hct/category/#catKey=100001&modelType;=All&pf;=MX+Series.
LEDs	**OK/FAIL** LED, one bicolor: • Green—MIC is functioning normally. • Yellow—MIC is coming online. • Red—MIC has failed. **LINK** LED, one bicolor per port: • Off—No link. • Green—Link is up. • Yellow—Link is disabled. The ports are labeled: • Port **[0]** through Port **[23]**

Related Documentation

- MX Series MIC Overview on page 17

Copyright © 2019, Juniper Networks, Inc.

40-Gigabit Ethernet MIC with QSFP+

Figure 24: 40-Gigabit Ethernet MIC with QSFP+

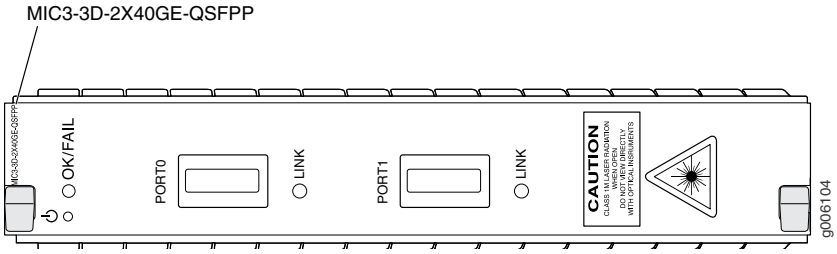

Software release	• 12.2 and later For information on which MPCs support this MIC, see "MIC/MPC Compatibility" on page 26. For information on which MICs are supported on MX Series routers, see "MICs Supported by MX Series Routers" on page 18.
Description	• Two 40-Gigabit Ethernet ports • Power requirement: 0.38 A @ 48 V (18 W) • Weight: 1.19 lb (0.54 kg) • Model number: MIC3-3D-2X40GE-QSFPP
Hardware features	• High-performance throughput on each port at speeds up to 40 Gbps • Up to 40-Gbps of full-duplex traffic • Maximum transmission units (MTUs) of up to 9192 bytes
Software features	• Synchronous Ethernet support • Optical diagnostics and related alarms • Virtual Router Redundancy Protocol (VRRP) support • IEEE 802.1Q virtual LANs (VLANs) support • Remote monitoring (RMON) EtherStats • Source MAC learning • MAC accounting and policing—Dynamic local address learning of source MAC addresses • Flexible Ethernet encapsulation • Multiple tag protocol identifiers (TPID)
Cables and connectors	TIP: You can use the Hardware Compatibility Tool to find information about the pluggable transceivers supported on your Juniper Networks device. The list of supported transceivers for the MX Series is located at https://pathfinder.juniper.net/hct/category/#catKey=100001&modelType;=All&pf;=MX+Series.

LEDs	**OK/FAIL** LED, one bicolor: • Green—MIC is functioning normally. • Red—MIC has failed. **LINK** LED, one green per port: • Off—No link. • On steadily—Link is up with or without activity. • Yellow—Link is disabled. The ports are labeled: • **PORT [0] - PORT [1]**

Related Documentation

- MX Series MIC Overview on page 17

100-Gigabit Ethernet MIC with CFP

Figure 25: 1-Port 100 Gigabit Ethernet MIC with CFP

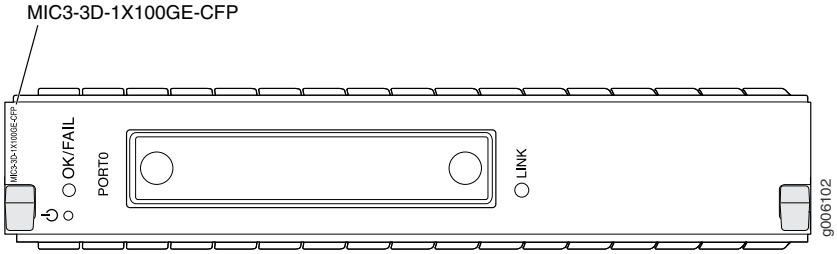

Software release	• 12.1 and later For information about which MPCs support this MIC, see "MIC/MPC Compatibility" on page 26. For information about which MICs are supported on MX Series routers, see "MICs Supported by MX Series Routers" on page 18.
Description	• One 100-Gigabit Ethernet port • Power requirement: 0.83 A @ 48 V (40 W) • Weight: 1.94 lb (0.88 kg) • Model number: MIC3-3D-1X100GE-CFP • Name in the CLI: **1X100GE CFP**
Hardware features	• High-performance throughput on each port at speeds up to 100 Gbps • Up to 100-Gbps of full-duplex traffic • Maximum transmission units (MTUs) of up to 9192 bytes • The port is labeled **PORT0**

Copyright © 2019, Juniper Networks, Inc.

Software features	• Synchronous Ethernet support • Optical diagnostics and related alarms • Virtual Router Redundancy Protocol (VRRP) support • IEEE 802.1Q virtual LANs (VLANs) support • Remote monitoring (RMON) EtherStats • Source MAC learning • MAC accounting and policing—Dynamic local address learning of source MAC addresses • Flexible Ethernet encapsulation • Multiple tag protocol identifiers (TPID)
Cables and connectors	TIP: You can use the Hardware Compatibility Tool to find information about the pluggable transceivers supported on your Juniper Networks device. The list of supported transceivers for the MX Series is located at https://pathfinder.juniper.net/hct/category/#catKey=100001&modelType;=All&pf;=MX+Series. NOTE: The CFP-100GBASE-ER4 transceiver is NEBS-compliant in the 100-Gigabit Ethernet MIC with CFP, but only when the other MIC slot in the MPC3E is empty. If another MIC is present and the ambient temperature exceeds 40 degrees C, the software converts CFP-100GBASE-ER4 to low power mode, which takes the transceiver offline. • Fiber-optic 100-Gigabit C form-factor Plugabble NOTE: The CFP-100GBASE-ZR transceiver is NEBS compliant in the 100-Gigabit Ethernet MIC with CFP, but only when the other MIC slot in the MPC3E is empty. If another MIC is present and the ambient air temperature exceeds 40 degrees C, the software disables the transmitter, which takes the optical transceiver offline. The other MIC slot must be filled with a blank panel.
LEDs	**OK/FAIL** LED, one bicolor: • Green—MIC is functioning normally. • Red—MIC has failed. **LINK** LED, one green per port: • Off—No link. • On steadily—Link is up. • Yellow—Link is disabled.

Related Documentation

- MX Series MIC Overview on page 17

100-Gigabit Ethernet MIC with CXP

Figure 26: 100-Gigabit Ethernet MIC with CXP

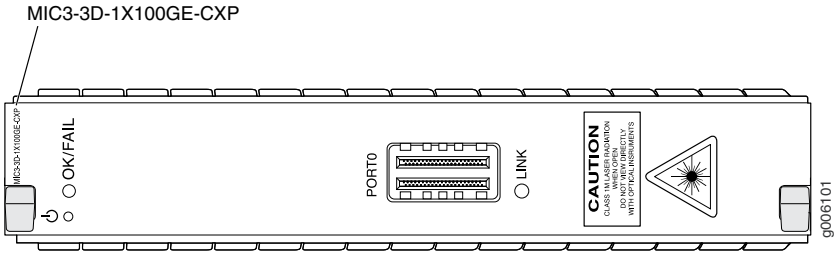

Software release	• 12.2 and later For information about which MPCs support this MIC, see "MIC/MPC Compatibility" on page 26. For information about which MICs are supported on MX Series routers, see "MICs Supported by MX Series Routers" on page 18.
Description	• One 100-gigabit Ethernet port • Power requirement: 0.42 A @ 48 V (20 W) • Weight: 1.03 lb (0.47 kg) • Model number: MIC3-3D-1X100GE-CXP • Name in the CLI: **3D 1x100GE CXP**
Hardware features	• High-performance throughput on each port at speeds up to 100 Gbps • Up to 100-Gbps of full-duplex traffic • Maximum transmission units (MTUs) of up to 9192 bytes • The port is labeled **PORT0**
Software features	• Synchronous Ethernet support • Optical diagnostics and related alarms • Virtual Router Redundancy Protocol (VRRP) support • IEEE 802.1Q virtual LANs (VLANs) support • Remote monitoring (RMON) EtherStats • Source MAC learning • MAC accounting and policing—Dynamic local address learning of source MAC addresses • Flexible Ethernet encapsulation • Multiple tag protocol identifiers (TPID)
Cables and connectors	TIP: You can use the Hardware Compatibility Tool to find information about the pluggable transceivers supported on your Juniper Networks device. The list of supported transceivers for the MX Series is located at https://pathfinder.juniper.net/hct/category/#catKey=100001&modelType;=All&pf;=MX+Series.

Copyright © 2019, Juniper Networks, Inc.

LEDs	**OK/FAIL** LED, one bicolor: • Green—MIC is functioning normally. • Red—MIC has failed. **LINK** LED, one green per port: • Off—No link. • On steadily—Link is up with or without activity. • Yellow—Link is disabled.

Related Documentation

- MX Series MIC Overview on page 17

100-Gigabit Ethernet MIC with CXP (4 Ports)

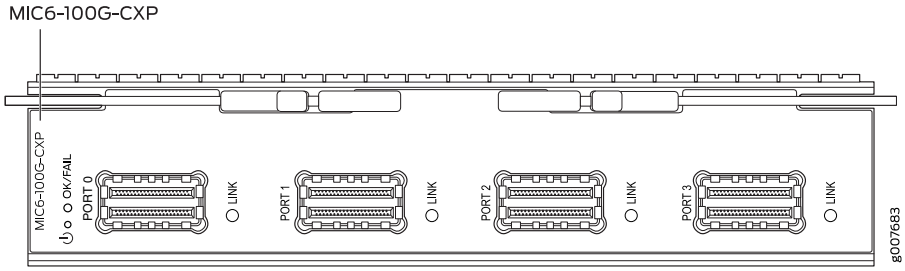

Software release	• Junos 13.3R2 and later For information about which MPCs support this MIC, see "MIC/MPC Compatibility" on page 26. For information about which MICs are supported on MX Series routers, see "MICs Supported by MX Series Routers" on page 18.
Description	• Four 100-Gigabit Ethernet ports • Power requirement: 5.5 A @ 10.4 V (57 W) • Weight: 2.7 lb (1.22 kg) • Model number: MIC6-100G-CXP • Name in the CLI: **4X100GE CXP**
Hardware features	• Line-rate throughput of up to 100Gbps per port. • Supports 100GBASE-SR10 over CXP pluggable optics • Supports LOS-squelch, enabling Synchronous Ethernet fast-clock-failover on a port down event • Maximum transmission units (MTUs) of up to 9192 bytes

Software features	• Compliant to ITU-T specifications • Optical diagnostics and related alarms • Virtual Router Redundancy Protocol (VRRP) support • IEEE 802.1Q virtual LANs (VLANs) support • IEEE 802.1ad support • Remote monitoring (RMON) EtherStats • Source MAC learning • MAC accounting and policing—Dynamic local address learning of source MAC addresses • In-service software upgrade (Unified ISSU)
Cables and connectors	TIP: You can use the Hardware Compatibility Tool to find information about the pluggable transceivers supported on your Juniper Networks device. The list of supported transceivers for the MX Series is located at https://pathfinder.juniper.net/hct/category/#catKey=100001&modelType;=All&pf;=MX+Series.
LEDs	**OK/FAIL** LED, one tricolor: • Green—MIC is functioning normally. • Yellow—MIC is coming online. • Red—MIC has failed. **LINK** LED, one bicolor per port: • Off—No link. • Green—Link is up. • Yellow—Link is disabled. The ports are labeled: • **Port 0** to **Port 3**

Related Documentation

- MX Series MIC Overview on page 17

100-Gigabit Ethernet MIC with CFP2

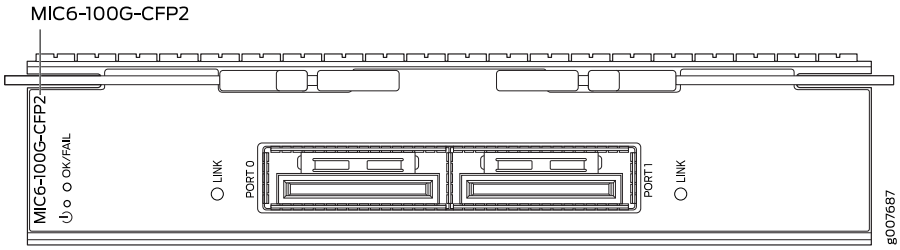

Software release	• Junos 13.3R3 and later For information about which MPCs support this MIC, see "MIC/MPC Compatibility" on page 26. For information about which MICs are supported on MX Series routers, see "MICs Supported by MX Series Routers" on page 18.

Copyright © 2019, Juniper Networks, Inc.

Description	• Two 100-Gigabit Ethernet CFP2 ports • Power requirement: 2 A @ 52 V (104 W) • Weight: 2.4 lb (1.09 kg) • Model number: MIC6-100G-CFP2 • Name in the CLI: **2X100GE CFP2 OTN**
Hardware features	• Line-rate throughput of up to 100 Gbps per port • Supports CFP2 pluggable optics • Supports LAN (103.125 Gbps) and OTN/OTU4 (111.81 Gbps) on a per-port basis • Provides IEEE 1588 time-stamping at physical interface for improved accuracy • Maximum transmission units (MTUs) of up to 9192 bytes
Software features	• Optical transport network (OTN) support for 100-Gigabit Ethernet interfaces • Compliant with ITU-T specifications • Transparent transport of 100-Gigabit Ethernet signals with OTU4 framing • Optical diagnostics and related alarms • Configurable 100-Gigabit Ethernet or OTN options per port • Virtual Router Redundancy Protocol (VRRP) support • IEEE 802.1Q VLAN support • IEEE 802.1ad support • Remote monitoring (RMON) EtherStats • Source MAC learning • MAC accounting and policing—Dynamic local address learning of source MAC addresses • In-service software upgrade (Unified ISSU)
Cables and connectors	TIP: You can use the Hardware Compatibility Tool to find information about the pluggable transceivers supported on your Juniper Networks device. The list of supported transceivers for the MX Series is located at https://pathfinder.juniper.net/hct/category/#catKey=100001&modelType;=All&pf;=MX+Series. NOTE: • CFP2-100G-ER4-D is not NEBS compliant on the MX960 router in FPC slot 0 or FPC slot 11. • CFP2-DCO-T-WDM-1 is not NEBS compliant on the MX960 router or the MX2020 router in FPC slot 0 or FPC slot 11. Slots **0** and **11** can only work with an ambient temperature of up to 40° C. NOTE: When inserting the CFP2 transceiver, ensure that the transceiver sits tightly in the port. You will hear a distinct click sound when the latch locks into the corresponding port. The latch must be fully engaged in the corresponding port for the CFP2 transceiver to function properly. Failing to do so will result in loss of connection. To verify that the CFP2 transceiver module is inserted properly, give a gentle pull by grasping the sides of the module. The module should sit tightly.

Copyright © 2019, Juniper Networks, Inc.

LEDs	**OK/FAIL** LED, one tricolor: • Green—MIC is functioning normally. • Yellow—MIC is coming online. • Red—MIC has failed. **LINK** LED, one bicolor per port: • Off—No link. • Green—Link is up. • Yellow—Link is disabled. Port labels: • **Port 0** and **Port 1**

Related Documentation

- MX Series MIC Overview on page 17

100-Gigabit DWDM OTN MIC with CFP2-ACO

MIC3-100G-DWDM

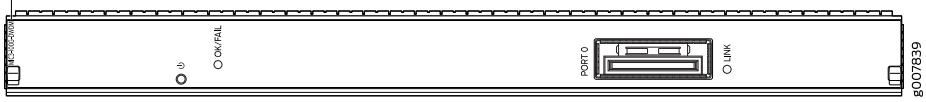

Software release	• Junos OS Release 15.1F5 and 15.1F6, Junos OS Release 17.1R1 and later For information about which MPCs support this MIC, see "MIC/MPC Compatibility" on page 26. For information about which MICs are supported on MX Series routers, see "MICs Supported by MX Series Routers" on page 18.

Description	• One 100-Gigabit DWDM OTN port
	• Power requirements (including transceiver) at different temperatures:
	  ◦ 55º C: 1.90 A @ 48 V (91 W)
	  ◦ 25º C: 1.73 A @ 48 V (83 W)
	• Weight: 2.3 lb (1.04 kg)
	• Model number: MIC3-100G-DWDM
	• Name in the CLI: **1X100GE DWDM CFP2-ACO**

Copyright © 2019, Juniper Networks, Inc.

Hardware features

- Dual-wide MIC that installs into two MIC slots
- Supports CFP2 analog coherent optics (CFP2-ACO)
- Transparent transport of a 100-Gigabit Ethernet signal with OTU4V framing
- ITU-standard OTN performance monitoring and alarm management
- Dual-polarization quadrature phase shift keying (DP-QPSK) modulation
- Supports three types of forward error correction (FEC):
  - Soft-decision FEC (SD-FEC)
  - High-gain FEC (HG-FEC)
  - G.709 FEC (GFEC)
- 100 channels on C-band ITU grid with 50-GHz spacing
- Latency:
  - SD-FEC: 14 μs (TX + RX)
  - HG-FEC: 22 μs (TX + RX)
  - GFEC: 6 μs (TX + RX)
- Interoperable with the CFP-100GBASE-ZR transceiver supported on the 100-Gigabit Ethernet MIC with CFP (MIC3-3D-1X100GE-CFP) on MX Series routers and the 100-Gigabit Ethernet PIC with CFP (P1-PTX-2-100GE-CFP) on PTX Series routers.
- Interoperable with the 100-Gigabit DWDM OTN PIC with CFP2 (PTX-5-100G-WDM) on PTX Series routers when the 100-Gigabit DWDM OTN MIC is configured to use SD-FEC or GFEC.

NOTE: The 1-port 100-Gigabit DWDM OTN MIC is not directly interoperable with the 2-port 100-Gigabit DWDM OTN PIC (P1-PTX-2-100G-WDM), but they can both operate over the same DWDM line system.

Software features	NOTE: For information about configuring the MIC, see Configuring OTN Interfaces on MIC3-100G-DWDM MIC. For information about upgrading the firmware on the PIC, see Upgrading Firmware on the 100-Gigabit DWDM OTN MIC (MIC3-100G-DWDM) .
	• Compliant with ITU G.709 and G.798
	• Provides a transport interface and state model (GR-1093)
	• Performance monitoring features such as alarms, threshold-crossing alarms, OTU/ODU error seconds and FEC and bit error rate (BER) statistics
	• SNMP management of the MIC based on *RFC 3591, Managed Objects for the Optical Interface Type*, including the following:
	  • Set functionality
	  • Black Link MIB
	  • IFOTN MIB
	  • Optics MIB
	  • FRU MIB
	• Pre-FEC BER monitoring provides interrupt-driven, BER-based detection of link signal degradation for MPLS fast reroute.
	• User-configurable optics options:
	  • Transmit (TX) laser enable and disable
	  • TX output power
	  • Wavelength
	  • Receive (RX) LOS warning or alarm thresholds
	  • Threshold crossing alarms (TCAs)
	  User-configurable card options:
	  • FEC mode (SD-FEC, HG-FEC, or GFEC)
	  • TCAs

Cables and connectors	TIP: You can use the Hardware Compatibility Tool to find information about the pluggable transceivers supported on your Juniper Networks device. The list of supported transceivers for the MX Series is located at https://pathfinder.juniper.net/hct/category/#catKey=100001&modelType;=All&pf;=MX+Series. NOTE: When inserting the C form-factor pluggable 2 (CFP2) transceiver, ensure that the transceiver sits tightly in the port. You hear a distinct click sound when the latch locks into the corresponding port. The latch must be fully engaged in the corresponding port for the CFP2 transceiver to function properly. Failing to do so can result in loss of connection. To verify that the CFP2 transceiver module is inserted properly, give a gentle pull by grasping the sides of the module. The module should sit tightly.

Copyright © 2019, Juniper Networks, Inc.

LEDs	**OK/FAIL** LED, one bicolor: • Off—MIC is powered off. • Green—MIC is initialized and online, functioning normally. • Amber—MIC is coming online, or is in fault state. **LINK** LED, one bicolor per port: • Off—Port is offline. • Solid green—Link is up. • Red—Port failure is detected. NOTE: The port is labeled **Port 0**.
Alarms, Errors, and Events	NOTE: For OTN alarms, see Table 24 on page 181. Chassis and MIC: • MIC (FRU) inserted or removed • MIC (FRU) Administrative State: In Service, Out Of Service • MIC (FRU) Operational State: Unequipped, Init, Normal, Mismatch, Fault, Upgrade • Mismatch equipment • Temperature alarm
	Port (interface): • Interface Administrative State: In Service, Out Of Service, Service MA, Out of Service MA • Interface Operational State: Init, Normal, Fault, Degraded
	Optical channel transport unit (OTU) TCAs: • OTU-TCA-BBE—15-minute background block error TCA • OTU-TCA-ES—15-minute far-end errored seconds TCA • OTU-TCA-SES—15-minute severely errored seconds TCA • OTU-TCA-UAS—15-minute unavailable seconds TCA Optical channel data unit (ODU) TCAs: • ODU-TCA-BBE—15-minute background block error TCA • ODU-TCA-ES—15-minute far-end errored seconds TCA • ODU-TCA-SES—15-minute severely errored seconds TCA • ODU-TCA-UAS—15-minute unavailable seconds TCA TIP: You can view OTU and ODU TCAs by using the **show interfaces transport pm otn** operational-mode CLI command.

Copyright © 2019, Juniper Networks, Inc.

NOTE: If you insert an invalid CFP module, the CLI displays **unsupported module** and a syslog message is generated.

Optics-related status:

- Module temperature
- Module voltage
- Module temperature alarm:
  - High alarm
  - Low alarm
  - High warning
  - Low warning
- Module voltage alarm:
  - High alarm
  - Low alarm
  - High warning
  - Low warning
- Module not ready alarm
- Module low power alarm
- Module initialization incomplete alarm
- Module fault alarm
- TX laser disabled alarm
- RX loss of signal alarm
- Modem lock state
- TX output power:
  - Current TX output power
  - Minimum over PM interval
  - Maximum over PM interval
  - Average over PM interval
- TX power alarm:
  - High alarm
  - Low alarm
  - High warning
  - Low warning
- RX input power (signal)
- RX input power (total):
  - Current RX input power (total)
  - Minimum over PM interval
  - Maximum over PM interval
  - Average over PM interval
- RX power alarm:
  - High alarm
  - Low alarm
  - High warning
  - Low warning
- RX loss of signal alarm
- Wavelength unlocked alarm

TIP: You can view optics-related status by using the **show interfaces transport pm optics** and **show interfaces diagnostics optics** operational-mode CLI commands.

Network lane receive-related status:

- Chromatic dispersion:
  - Current chromatic dispersion
  - Minimum over PM interval
  - Maximum over PM interval
  - Average over PM interval
- Differential group delay:
  - Current differential group delay
  - Minimum over PM interval
  - Maximum over PM interval
  - Average over PM interval
- Q^2-factor:
  - Current Q^2-factor
  - Minimum over PM interval
  - Maximum over PM interval
  - Average over PM interval
- Carrier frequency offset
  - Current carrier frequency offset
  - Minimum over PM interval
  - Maximum over PM interval
  - Average over PM interval
- Signal-to-noise ratio (SNR)
  - Current SNR
  - Minimum over PM interval
  - Maximum over PM interval
  - Average over PM interval

TIP: You can view network lane receive-related status by using the **show interfaces transport pm optics** operational-mode CLI command.

FEC statistics:

- Corrected Errors—the number of bits received that were in error, but corrected.
- Uncorrected Words—the number of FEC codewords received that were uncorrectable.
- Corrected Error Ratio—the number of corrected bits divided by the number of bits received

TIP: You can view FEC statistics by using the **show interfaces *interface-name* extensive** operational-mode CLI command.

Table 24 on page 181 describes the OTN alarms and defects that can occur on the MIC and the link status when the alarm or defect occurs.

TIP: You can view OTN alarms and defects by using the **show interfaces *interface-name* extensive** operational-mode CLI command.

Copyright © 2019, Juniper Networks, Inc.

Table 24: OTN Alarms and Defects

Category	Alarm	Description	Link Status
OTN	LOS	Loss of signal	Link down
	LOF	Loss of frame	Link down
	LOM	Loss of multiframe	Link down
OTN FEC	FEC Degrade (OTU-FEC-DEG)	Forward error correction degraded	Link down if signal degrade or backward FRR thresholds are met
	FEC Excessive (OTU-FEC-EXE)	There are uncorrected words and there are errors in the frame header	Possible link down
OTN OTU	OTU-AIS	Alarm indication signal or all ones signal	Link down
	OTU-BDI	Backward defect identification	Link down
	OTU-IAE	Incoming alignment error	Warning
	OTU-TTIM	Destination access point identifier (DAPI), source access point identifier (SAPI), or both mismatch from expected to received	Can cause the link to be down if **otu-ttim-act-enable** is configured at the **[edit interfaces *interface-name* otn-options]**hierarchy level
	OTU-BIAE	Backward incoming alignment error	Warning
	OTU-TSF	OTU trail signal fail	Warning
	OTU-SSF	OTU server signal fail	Warning

Copyright © 2019, Juniper Networks, Inc.

Table 24: OTN Alarms and Defects (continued)

Category	Alarm	Description	Link Status
OTN ODU	ODU-AIS	Alarm indication signal or all ones signal	Link down
	ODU-OCI	Open connection error	Link down
	ODU-LCK	ODU lock triggers for path monitoring and TCM levels 1 through 6	Link down
	ODU-BDI	Backward defect indication	Link down
	ODU-TTIM	DAPI or SAPI mismatch from expected to received	Can cause the link to be down if **odu-ttim-act-enable** is configured at the **[edit interfaces *interface-name* otn-options]** hierarchy level
	ODU-IAE	Incoming alignment error	Warning
	ODU-LTC	Loss of tandem connection	Warning
	ODU-CSF	Client signal failure	Warning
	ODU-TSF	Trail signal fail	Warning
	ODU-SSF	Server signal fail	Warning
	ODU-PTIM	Payload type mismatch	Link down

Related Documentation

- *100-Gigabit DWDM OTN CFP2-ACO Transceiver Wavelengths*
- MX Series MIC Overview on page 17
- Configuring OTN Interfaces on MIC3-100G-DWDM MIC
- Upgrading Firmware on the 100-Gigabit DWDM OTN MIC (MIC3-100G-DWDM)
- *show interfaces extensive*
- *show interfaces transport pm*
- *show interfaces diagnostics optics (Gigabit Ethernet, 10-Gigabit Ethernet, 40-Gigabit Ethernet, 100-Gigabit Ethernet, and Virtual Chassis Port)*

Copyright © 2019, Juniper Networks, Inc.

Channelized SONET/SDH OC3/STM1 (Multi-Rate) MICs with SFP

Figure 27: 4-Port Channelized SONET/SDH OC3/STM1 (Multi-Rate) MIC with SFP

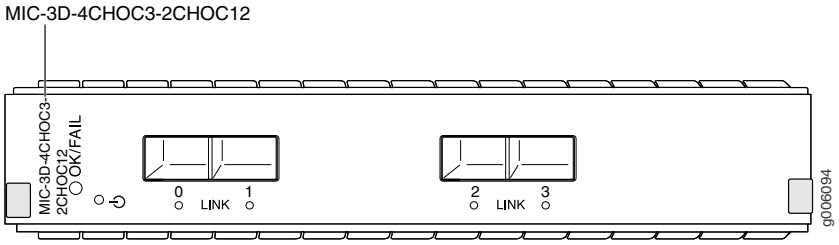

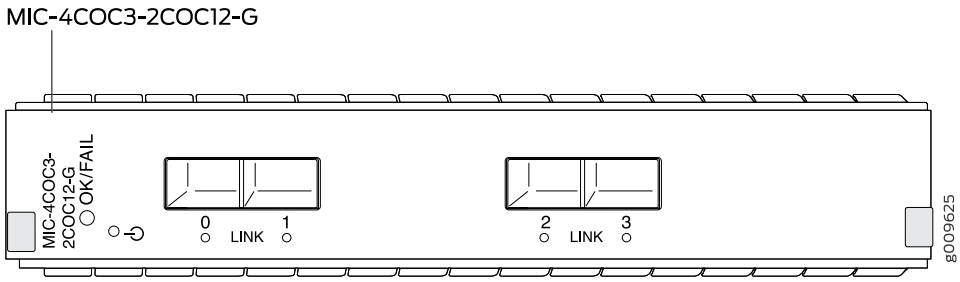

Figure 28: 8-Port Channelized SONET/SDH OC3/STM1 (Multi-Rate) MIC with SFP

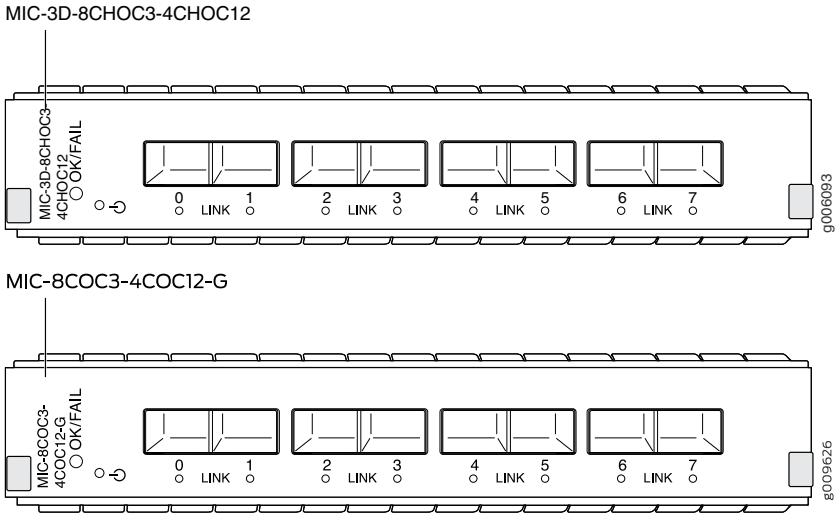

Software release	• Junos OS Release 11.4 and later For information on which MPCs support these MICs, see "MIC/MPC Compatibility" on page 26. For information on which MICs are supported on MX Series routers, see "MICs Supported by MX Series Routers" on page 18.

Description	• 4-port: Rate-selectable using one of the following rates:
	  • 4-port OC3/STM1
	  • 2-port OC12/STM4
	• 8-port: Rate-selectable using one of the following rates:
	  • 8-port OC3/STM1
	  • 4-port OC12/STM4
	• Channelization: OC3, DS3, DS1, DS0, E3, E1. For information on channelization numbers, see *Channelized Interfaces Feature Guide for Routing Devices*.
	• Power requirement:
	  • 4-port: 4.56 A @ 9 V (41 W)
	  • 8-port: 5.78 A @ 9 V (52 W)
	• Weight:
	  • 4-port: 4.4 lb (2 kg)
	  • 8-port: 4.4 lb (2 kg)
	• Model number:
	  • 4-port: MIC-3D-4CHOC3-2CHOC12
	  • 4-port: MIC-4COC3-2COC12-G
	  • 8-port: MIC-3D-8CHOC3-4CHOC12
	  • 4-port: MIC-4COC3-2COC12-G
	  • 8-port: MIC-3D-8CHOC3-4CHOC12
	  • 8-port: MIC-8COC3-4COC12-G
	
	NOTE: MIC-4COC3-2COC12-G and MIC-8COC3-4COC12-G are RoHS 6/6 compliant.

Copyright © 2019, Juniper Networks, Inc.

Hardware features	• The ports are labeled:
	  • 4-port: 0-3
	  • 8-port: 0-7

Software features	• Maximum transmission units (MTUs) of up to 9192 bytes
	• Per-port SONET/SDH framing
	• Local and remote loopback on each port
	• Optical diagnostics and monitoring
	• Clocking options: internal or external/loop mode
	• Encapsulations:
	  • MPLS fast reroute
	  • MPLS CCC (circuit cross-connection)
	  • MPLS TCC (translational cross-connection)
	  • Cisco High-Level Data Link Control (cHDLC)
	  • Cisco HDLC CCC
	  • Cisco HDLC TCC
	  • Point-to-Point Protocol (PPP)
	  • PPP for CCC
	  • PPP for TCC
	  • Flexible Frame Relay
	  • Frame Relay
	  • Frame Relay for CCC
	  • Frame Relay for TCC
	  • PPP over Frame Relay
	  • Multilink-based protocols (Junos OS Release 12.1 and later):
	  • Multilink Point-to-Point Protocol (MLPPP)
	  • Multiclass MLPPP
	  • Multilink Frame Relay (MLFR) end-to-end (FRF.15)
	  • Multilink Frame Relay (MLFR) UNI NNI (FRF.16, also referred to as MFR)
	  • Compressed Real-Time Transport Protocol (CRTP)
	NOTE: When you configure multilink services on a MIC in an MX Series router, ensure that a Multiservices DPC is present in the same router.
	NOTE: Ethernet over Frame Relay is not supported.

Cables and connectors	TIP: You can use the Hardware Compatibility Tool to find information about the pluggable transceivers supported on your Juniper Networks device. The list of supported transceivers for the MX Series is located at https://pathfinder.juniper.net/hct/category/#catKey=100001&modelType;=All&pf;=MX+Series.

LEDs	**OK/FAIL** LED, one bicolor: • Green—MIC is functioning normally • Red—MIC has failed **LINK** LED, one green per port: • Off—Not enabled • Green—Online with no alarms or failures • Yellow—Online with alarms for remote failures • Red—Active with a local alarm; router has detected a failure
Alarms, errors, and events	SONET alarms: • Loss of light (LOL) • Loss of signal (LOS) • Loss of frame (LOF) • Phase lock loop (PLL) • Severely errored frame (SEF) • Alarm indicator signal–line (AIS-L) • Alarm indicator signal–path (AIS-P) • Remote defect indicator–line (RDI-L) • Remote defect indicator–path (RDI-P) • Loss of pointer–path (LOP-P) • Bit error rate–signal degrade (BERR-SD) • Bit error rate–signal fail (BERR-SF) • Payload label mismatch–Path (PLM-P) • Unequipped–path (UNEQ-P) • Remote error indicator–path (REI-P) • Alarm indicator signal–virtual container (V-AIS) • Loss of pointer–virtual container (V-LOP) • Remote defect indicator–virtual container (V-RDI) • Unequipped–virtual container (V-UNEQ) • Mismatch–virtual container (V-MIS) SDH alarms: • Loss of light (LOL) • Phase lock loop (PLL) • Loss of frame (LOF) • Loss of signal (LOS) • Severely errored frame (SEF) • Multiplex-section alarm indicator signal (MS-AIS) • Higher order path–alarm indication signal (HP-AIS) • Loss of pointer (LOP) • Bit error rate–signal degrade (BER-SD) • Bit error rate–signal fail (BER-SF) • Multiplex section–far end receive failure (MS-FERF) • Higher order path—far-end receive failure (HP-FERF) • Higher order path—payload label mismatch (HP-PLM) • Remote error indicator (REI)

Copyright © 2019, Juniper Networks, Inc.

- Unequipped (UNEQ)
- Tributary unit–alarm indicator signal (TU-AIS)
- Tributary unit–loss of pointer (TU-LOP)
- Tributary unit–remote defect indicator (TU-RDI)
- Tributary unit–unequipped (TU-UNEQ)
- Tributary unit–mismatch (TU-MIS)

DS3 alarms:

- Alarm indication signal (AIS)
- Loss of frame (LOF)
- Loss of signal seconds (LOS)
- Phase lock loop (PLL)

DS3 error detection:

- C-bit code violations (CCV)
- C-bit errored seconds (CES)
- C-bit severely errored seconds (CSES)
- CRC errors
- Excessive zeros (EXZ)
- Far-end block error (FEBE)
- Far-end receive failure (FERF)
- Line errored seconds (LES)
- Parity bit (P-bit) code violations (PCV)
- Parity bit (P-bit) errored seconds (PES)
- Parity bit (P-bit) severely errored framing seconds (PSES)
- Severely errored framing seconds (SEFS)
- Unavailable seconds (UAS)

Related Documentation

- MX Series MIC Overview on page 17

Channelized OC3/STM1 (Multi-Rate) Circuit Emulation MIC with SFP

Figure 29: Channelized OC3/STM1 (Multi-Rate) Circuit Emulation MIC with SFP

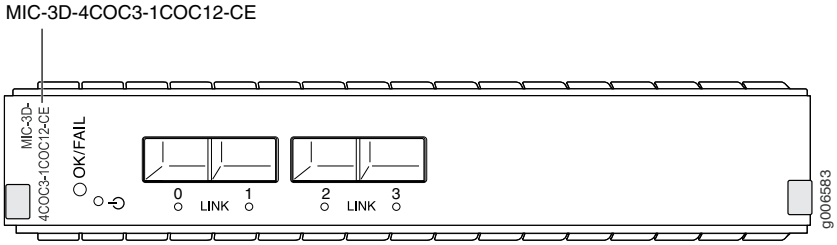

Software release	• Junos OS Release 12.2 and later For information on which MPCs support this MIC, see "MIC/MPC Compatibility" on page 26. For information on which MICs are supported on MX Series routers, see "MICs Supported by MX Series Routers" on page 18.

Description	• Four OC3/STM1 ports
	• Rate-selectable using one of the following rates:
	  ◦ 4-port OC3/STM1
	  ◦ 1-port OC12/STM4
	• One channelized OC12/STM4 port (down to DS0)
	• SONET or SDH is configurable on a MIC level
	• OC3 channelization:
	  ◦ 4 OC3 channel
	  ◦ 336 DS1 channels
	  ◦ 2016 DS0 channels (combination of nxDS0)
	• SDH channelization:
	  ◦ 4 STM1 channel
	  ◦ 252 E1 channels
	  ◦ 2016 DS0 channels (combination of nxDS0)
	• Power requirement: 2.83 A @ 12 V (33.96 W)
	• Weight: 1.63 lb (0.74 kg)
	• Model number: MIC-3D-4COC3-1COC12-CE

Hardware features	• Ports are numbered 0 through 3

Copyright © 2019, Juniper Networks, Inc.

Software features	• Per-MIC SONET/SDH framing
	• Internal and loop clocking
	• Encapsulations:
	  ◦ Pseudo Wire Emulation Edge-to-Edge (PWE3) Architecture (RFC 3985)
	  ◦ Requirements for Pseudo-Wire Emulation Edge-to-Edge (PWE3) (RFC 3916)
	  ◦ Structure-Agnostic Time Division Multiplexing (TDM) over Packet (SAToP) (RFC 4553)
	  ◦ Structure-Aware Time Division Multiplexed (TDM) Circuit Emulation Service over Packet Switched Network (CESoPSN) (RFC 5086)
	  ◦ Pseudowire Emulation Edge-to-Edge (PWE3) Control Word for Use over an MPLS PSN (RFC 4385)
	  ◦ L2 Network Interconnections (protocol stitching):
	  ◦ TDM LDP PWs to BGP L2VPN—see *Using the Layer 2 Interworking Interface to Interconnect a Layer 2 Circuit to a Layer 2 VPN* for more information. Note that stitching CESoPSN PW to BGP L2VPN is not supported.
	  ◦ Unified in-service software upgrade (unified ISSU)

Interfaces	Syntax: *mediatype-fpc/pic/port* where: • mediatype: coc3, coc12, cstm1, cstm4, or ds • fpc: Slot in the router where the MPC is installed • pic: 0 when installed in MIC slot 0 or 2 when installed in MIC slot 1 • port: 0 through 3 For example, cstm4-1/2/0 is the channelized STM4 interface for port 0 on the MIC installed in MIC slot 1 on an MPC installed in slot 1.
Cables and connectors	TIP: You can use the Hardware Compatibility Tool to find information about the pluggable transceivers supported on your Juniper Networks device. The list of supported transceivers for the MX Series is located at https://pathfinder.juniper.net/hct/category/#catKey=100001&modelType;=All&pf;=MX+Series. NOTE: To extend the life of the laser, when a MIC is not being actively used with any valid links, take the MIC offline until you are ready to establish a link to another device. For information about taking a MIC offline, see the **request chassis pic offline** command in the *Junos OS System Basics and Services Command Reference*.
LEDs	**OK/FAIL** LED, one bicolor: • Green—MIC is functioning normally • Red—MIC has failed **LINK** LED, one tricolor per port: • Off—Not enabled • Green—Online with no alarms or failures • Yellow—Online with alarms for remote failures • Red—Active with a local alarm; router has detected a failure

Alarms, errors, and events	Structure-agnostic alarms for T1 and E1 interface: • Alarm indication signal (AIS) • Loss of signal (LOS) • Line code violation (LCV) • Errored seconds (ES) • Line-errored seconds (LES) • Severely errored seconds (SES) • Unavailable errored seconds (UAS) Structure aware alarms for T1 and E1 interface: • Severely errored frame (SEF) • Block error event (BEE) • Loss of frame (LOF) • Yellow alarm (remote alarm indication RAI) • Path code violation (PCV) • Severely errored frame seconds (SEFS) • Bursty errored seconds (BES)

Related Documentation

- MX Series MIC Overview on page 17
- *Using the Layer 2 Interworking Interface to Interconnect a Layer 2 Circuit to a Layer 2 VPN*

Channelized OC3/STM1 (Multi-Rate) Circuit Emulation MIC with SFP (H)

Figure 30: Channelized OC3/STM1 (Multi-Rate) Circuit Emulation MIC with SFP (H)

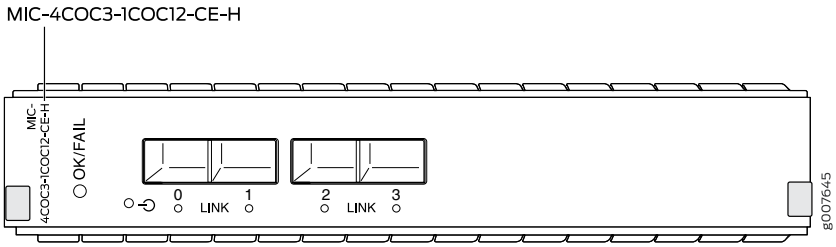

Software release	• Junos OS Release 13.2R2 and later For information on which MPCs support this MIC, see "MIC/MPC Compatibility" on page 26. For information on which MICs are supported on MX Series routers, see "MICs Supported by MX Series Routers" on page 18.

Copyright © 2019, Juniper Networks, Inc.

Description	• Four OC3/STM1 ports
	• Rate-selectable using one of the following rates:
	  ◦ 4-port OC3/STM1
	  ◦ 1-port OC12/STM4
	• One channelized OC12/STM4 port (down to DS0)
	• SONET or SDH is configurable on a MIC level
	• SONET channelization:
	  ◦ 4 OC3 channel
	  ◦ 336 DS1 channels
	  ◦ 2016 DS0 channels (combination of nxDS0)
	• SDH channelization:
	  ◦ 4 STM1 channel
	  ◦ 252 E1 channels
	  ◦ 2016 DS0 channels (combination of nxDS0)
	• Power requirement: 2.83 A @ 12 V (33.96 W)
	• Weight: 1.63 lb (0.74 kg)
	• Model number: MIC-4COC3-1COC12-CE-H

Hardware features	• Ports are numbered 0 through 3 • Environmentally hardened for –40° F (–40° C) to 149° F (65° C) operating temperatures

Software features	• Per-MIC SONET/SDH framing
	• Internal and loop clocking
	• Encapsulations:
	  ◦ Pseudo Wire Emulation Edge-to-Edge (PWE3) Architecture (RFC 3985)
	  ◦ Requirements for Pseudo-Wire Emulation Edge-to-Edge (PWE3) (RFC 3916)
	  ◦ Structure-Agnostic Time Division Multiplexing (TDM) over Packet (SAToP) (RFC 4553)
	  ◦ Structure-Aware Time Division Multiplexed (TDM) Circuit Emulation Service over Packet Switched Network (CESoPSN) (RFC 5086)
	  ◦ Pseudowire Emulation Edge-to-Edge (PWE3) Control Word for Use over an MPLS PSN (RFC 4385)

Interfaces	Syntax: *mediatype-fpc/pic/port* where: • mediatype: coc3, coc12, cstm1, cstm4, or ds • fpc: Slot in the router where the MPC is installed • pic: 0 when installed in MIC slot 0 or 2 when installed in MIC slot 1 • port: 0 through 3 For example, cstm4-1/2/0 is the channelized STM4 interface for port 0 on the MIC installed in MIC slot 1 on an MPC installed in slot 1.

Copyright © 2019, Juniper Networks, Inc.

Cables and connectors	TIP: You can use the Hardware Compatibility Tool to find information about the pluggable transceivers supported on your Juniper Networks device. The list of supported transceivers for the MX Series is located at https://pathfinder.juniper.net/hct/category/#catKey=100001&modelType;=All&pf;=MX+Series. NOTE: To extend the life of the laser, when a MIC is not being actively used with any valid links, take the MIC offline until you are ready to establish a link to another device. For information about taking a MIC offline, see the **request chassis pic offline** command in the *Junos OS System Basics and Services Command Reference*.
LEDs	**OK/FAIL** LED, one bicolor: • Green—MIC is functioning normally • Red—MIC has failed **LINK** LED, one tricolor per port: • Off—Not enabled • Green—Online with no alarms or failures • Yellow—Online with alarms for remote failures • Red—Active with a local alarm; router has detected a failure
Alarms, errors, and events	Structure-agnostic alarms for T1 and E1 interface: • Alarm indication signal (AIS) • Loss of signal (LOS) • Line code violation (LCV) • Errored seconds (ES) • Line-errored seconds (LES) • Severely errored seconds (SES) • Unavailable errored seconds (UAS) Structure aware alarms for T1 and E1 interface: • Severely errored frame (SEF) • Block error event (BEE) • Loss of frame (LOF) • Yellow alarm (remote alarm indication RAI) • Path code violation (PCV) • Severely errored frame seconds (SEFS) • Bursty errored seconds (BES)

Related Documentation

- MX Series MIC Overview on page 17

Copyright © 2019, Juniper Networks, Inc.

Channelized E1/T1 Circuit Emulation MIC

Figure 31: Channelized E1/T1 Circuit Emulation MIC

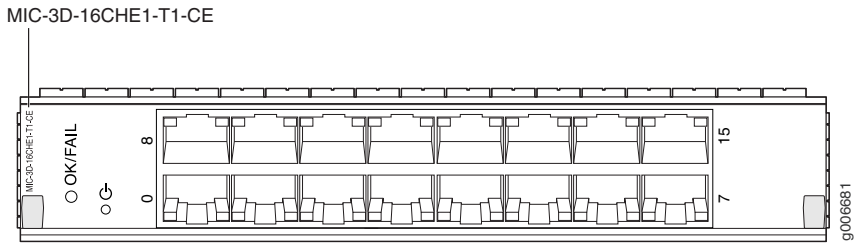

Software release	• Junos OS Release 12.3 and later For information on which MPCs support this MIC, see "MIC/MPC Compatibility" on page 26. For information on which MICs are supported on MX Series routers, see "MICs Supported by MX Series Routers" on page 18.

Description	• Sixteen E1 or T1 ports
	• Per-MIC E1/T1 framing
	• DS1 channelization per port:
	  • 1 DS1 channel
	  • 24 DS0 channels
	• E1 channelization per port:
	  • 1 E1 channel
	  • 32 DS0 channels
	• Internal and loop clocking
	• Power requirement: 2.21 A @ 12 V (26.55 W)
	• Weight: 1.57 lb (0.71 kg)
	• Model number: MIC-3D-16CHE1-T1-CE

Hardware features	• Ports are numbered:
	  • Top row: 8 and 15 from left to right
	  • Bottom row: 0 and 7 from left to right

Software features	• Full bit error rate test (BERT)
	• DS1 and E1 interfaces are selectable on a per-port granularity
	• Per-port framing is not supported
	• You can configure the following framing modes using the CLI:
	  ◦ T1—SF, ESF, D4/superframe, ESF (extended superframe)
	  ◦ E1—G704, G704–no-crc4, unframed
	• Local, remote, and per-port loopback diagnostics
	• Encapsulations:
	  ◦ Pseudowire Emulation Edge to Edge (PWE3) Architecture (RFC 3985)
	  ◦ Requirements for Pseudowire Emulation Edge to Edge (PWE3) (RFC 3916)
	  ◦ Structure-Agnostic Time Division Multiplexing (TDM) over Packet (SAToP) (RFC 4553)
	  ◦ Structure-Aware Time Division Multiplexed (TDM) Circuit Emulation Service over Packet-Switched Network (CESoPSN) (RFC 5086)
	  ◦ Pseudowire Emulation Edge to Edge (PWE3) Control Word for Use over an MPLS PSN (RFC 4385)
	• In-service software upgrade (Unified ISSU)

Cables and connectors	TIP: You can use the Hardware Compatibility Tool to find information about the pluggable transceivers supported on your Juniper Networks device. The list of supported transceivers for the MX Series is located at https://pathfinder.juniper.net/hct/category/#catKey=100001&modelType;=All&pf;=MX+Series. • RJ-48 connector
LEDs	**OK/FAIL** LED, one bicolor: • Green—MIC is functioning normally. • Red—MIC has failed. One tricolor per port: • Off—Not enabled. • Green—Online with no alarms or failures. • Yellow—Online with alarms for remote failures. • Red—Active with a local alarm; router has detected a failure.

Copyright © 2019, Juniper Networks, Inc.

Alarms, errors, and events	• Structure-agnostic alarms for T1 and E1 interface:
	  • Alarm indication signal (AIS)
	  • Loss of signal (LOS)
	• Structure-aware alarms for T1 and E1 interface:
	  • Loss of signal (LOS)
	  • Alarm indication signal (AIS)
	  • Loss of frame (LOF)
	  • Remote alarm indication signal (RAIS)
	• Structure-agnostic error detection for T1 and E1 interface:
	  • Errored seconds (ES)
	  • Line code violation (LCV)
	  • Line errored seconds (LES)
	  • Severely errored seconds (SES)
	  • Unavailable seconds (UAS)
	  • Loss of signal seconds (LOSS)
	• Structure-aware error detection for T1 and E1 interface:
	  • Severely errored frame (SEF)
	  • Block error event (BEE)
	  • Line code violation (LCV)
	  • Path code violation (PCV)
	  • Line errored seconds (LES)
	  • Errored seconds (ES)
	  • Severely errored seconds (SES)
	  • Severely errored frame seconds (SEFS)
	  • Bursty errored seconds (BES)
	  • Unavailable seconds (UAS)
	  • Loss of signal seconds (LOSS)
	  • Loss of framing seconds (LOFS)
	  • Far-end block error (FEBE) (E1 only)
	  • CRC errors (E1 only)

Related Documentation

- MX Series MIC Overview on page 17

Channelized E1/T1 Circuit Emulation MIC (H)

Figure 32: Channelized E1/T1 Circuit Emulation MIC (H)

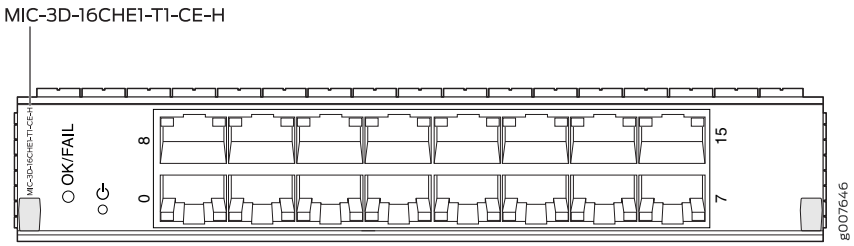

Software release	• Junos OS Release 13.2R2 and later For information on which MPCs support this MIC, see "MIC/MPC Compatibility" on page 26. For information on which MICs are supported on MX Series routers, see "MICs Supported by MX Series Routers" on page 18.

Description	• Sixteen E1 or T1 ports
	• Per-MIC E1/T1 framing
	• DS1 channelization per port:
	  • 1 DS1 channel
	  • 24 DS0 channels
	• E1 channelization per port:
	  • 1 E1 channel
	  • 32 DS0 channels
	• Internal and loop clocking
	• Power requirement: 2.21 A @ 12 V (26.55 W)
	• Weight: 1.57 lb (0.71 kg)
	• Model number: MIC-3D-16CHE1-T1-CE-H

Hardware features	• Ports are numbered:
	  • Top row: 8 and 15 from left to right
	  • Bottom row: 0 and 7 from left to right
	• Environmentally hardened for –40° F (–40° C) to 149° F (65° C) operating temperatures

Copyright © 2019, Juniper Networks, Inc.

Software features	• Full bit error rate test (BERT)
	• DS1 and E1 interfaces are selectable on a per-port granularity
	• Per-port framing is not supported
	• You can configure the following framing modes using the CLI:
	  ◦ T1—SF, ESF, D4/superframe, ESF (extended superframe)
	  ◦ E1—G704, G704–no-crc4, unframed
	• Local, remote, and per-port loopback diagnostics
	• Encapsulations:
	  ◦ Pseudowire Emulation Edge to Edge (PWE3) Architecture (RFC 3985)
	  ◦ Requirements for Pseudowire Emulation Edge to Edge (PWE3) (RFC 3916)
	  ◦ Structure-Agnostic Time Division Multiplexing (TDM) over Packet (SAToP) (RFC 4553)
	  ◦ Structure-Aware Time Division Multiplexed (TDM) Circuit Emulation Service over Packet-Switched Network (CESoPSN) (RFC 5086)
	  ◦ Pseudowire Emulation Edge to Edge (PWE3) Control Word for Use over an MPLS PSN (RFC 4385)

Interfaces	Syntax: *media-type-fpc/pic/port* where: • media-type: ct1, ds, t1, or e1 • fpc: Slot in the router where the MPC is installed • pic: 0 when installed in MIC slot 0 or 2 when installed in MIC slot 1 • port: 0 through 15 For example, t1-2/2/0 is the T1 interface for port 0 on the MIC installed in MIC slot 1 on an MPC installed in slot 2.
Cables and connectors	TIP: You can use the Hardware Compatibility Tool to find information about the pluggable transceivers supported on your Juniper Networks device. The list of supported transceivers for the MX Series is located at https://pathfinder.juniper.net/hct/category/#catKey=100001&modelType;=All&pf;=MX+Series. • RJ-48 connector
LEDs	**OK/FAIL** LED, one bicolor: • Green—MIC is functioning normally. • Red—MIC has failed. One tricolor per port: • Off—Not enabled. • Green—Online with no alarms or failures. • Yellow—Online with alarms for remote failures. • Red—Active with a local alarm; router has detected a failure.

Copyright © 2019, Juniper Networks, Inc.

Alarms, errors, and events	• Structure-agnostic alarms for T1 and E1 interface:
	  ◦ Alarm indication signal (AIS)
	  ◦ Loss of signal (LOS)
	• Structure-aware alarms for T1 and E1 interface:
	  ◦ Loss of signal (LOS)
	  ◦ Alarm indication signal (AIS)
	  ◦ Loss of frame (LOF)
	  ◦ Remote alarm indication signal (RAIS)
	• Structure-agnostic error detection for T1 and E1 interface:
	  ◦ Errored seconds (ES)
	  ◦ Line code violation (LCV)
	  ◦ Line errored seconds (LES)
	  ◦ Severely errored seconds (SES)
	  ◦ Unavailable seconds (UAS)
	  ◦ Loss of signal seconds (LOSS)
	• Structure-aware error detection for T1 and E1 interface:
	  ◦ Severely errored frame (SEF)
	  ◦ Block error event (BEE)
	  ◦ Line code violation (LCV)
	  ◦ Path code violation (PCV)
	  ◦ Line errored seconds (LES)
	  ◦ Errored seconds (ES)
	  ◦ Severely errored seconds (SES)
	  ◦ Severely errored frame seconds (SEFS)
	  ◦ Bursty errored seconds (BES)
	  ◦ Unavailable seconds (UAS)
	  ◦ Loss of signal seconds (LOSS)
	  ◦ Loss of framing seconds (LOFS)
	  ◦ Far-end block error (FEBE) (E1 only)
	  ◦ CRC errors (E1 only)

Related Documentation

- MX Series MIC Overview on page 17

Copyright © 2019, Juniper Networks, Inc.

Tri-Rate MIC

Figure 33: 40-Port Tri-Rate MIC

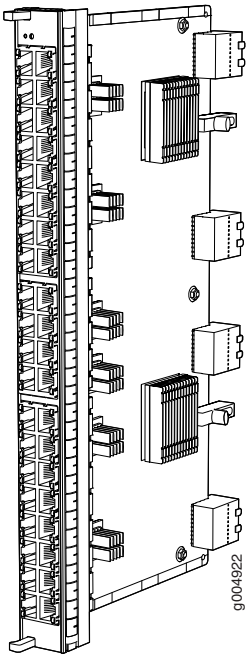

Software release	• Junos 10.2 and later For information on which MPCs support this MIC, see "MIC/MPC Compatibility" on page 26. For information on which MICs are supported on MX Series routers, see "MICs Supported by MX Series Routers" on page 18.
Description	• 40 autonegotiating 10BASE-T, 100BASE-TX, or 1000BASE-T Megabit Ethernet ports • Power requirement: 0.85 A @ 48 V (41 W) • Weight: 1.9 lb (0.9 kg) • Model number: MIC-3D-40GE-TX • Name in the CLI: **3D 40GE TX**
Hardware features	• Dual-wide MIC that installs into 2 slots. For information on how to install dual-wide MICs, see the *Installing Dual-Wide MIC* topic in the respective *MX Series Router Hardware Guide*. • High-performance throughput on each port at speeds of 10 Mbps, 100 Mbps, or 1000 Mbps • Up to 40-Gbps of full-duplex traffic • Autonegotiation between Gigabit Ethernet circuit partners • Maximum transmission units (MTUs) of up to 9192 bytes

Software features	• Virtual Router Redundancy Protocol (VRRP) support • IEEE 802.1Q virtual LANs (VLANs) support • Remote monitoring (RMON) EtherStats • Source MAC learning • MAC accounting and policing—Dynamic local address learning of source MAC addresses • Flexible Ethernet encapsulation • Multiple tag protocol identifiers (TPID)
Interfaces	Syntax: ge-*fpc/pic/port* where: • fpc: Slot in the router where the MPC is installed. • pic: The ports on the MPC are divided into four logical PICs numbered 0, 1, 2, and 3. • port: 0 through 9 For example, ge-2/3/0 is the interface for port 0 in logical PIC 3 on the MPC installed in slot 2. Figure 15 on page 156, Figure 35 on page 202, and Figure 36 on page 202 illustrate the port numbering for the Tri-Rate MIC installed in the MX960, MX480, and MX240, respectively.
Cables and connectors	• Connector: Four-pair, Category 5 shielded twisted-pair connectivity through an RJ-45 connector • Pinout: MDI, MDI crossover • Maximum distance: 328 ft (100 m) CAUTION: Do not use RJ-45 cables with strain-relief boots exceeding 1.5 mm from the bottom of the connector. Cable boots that exceed this measurement can damage the port.
LEDs	OK/fail LED, one bicolor: • Green—MIC is functioning normally. • Red—MIC has failed. Link LED, one green per port: • Off—No link. • On steadily—Link is up.

Figure 15 on page 156, Figure 35 on page 202, and Figure 36 on page 202 illustrate the port numbering for the Tri-Rate MIC installed in the MX960, MX480, and MX240, respectively.

Copyright © 2019, Juniper Networks, Inc.

Figure 34: Port Numbering for the Tri-Rate MIC (MX960)

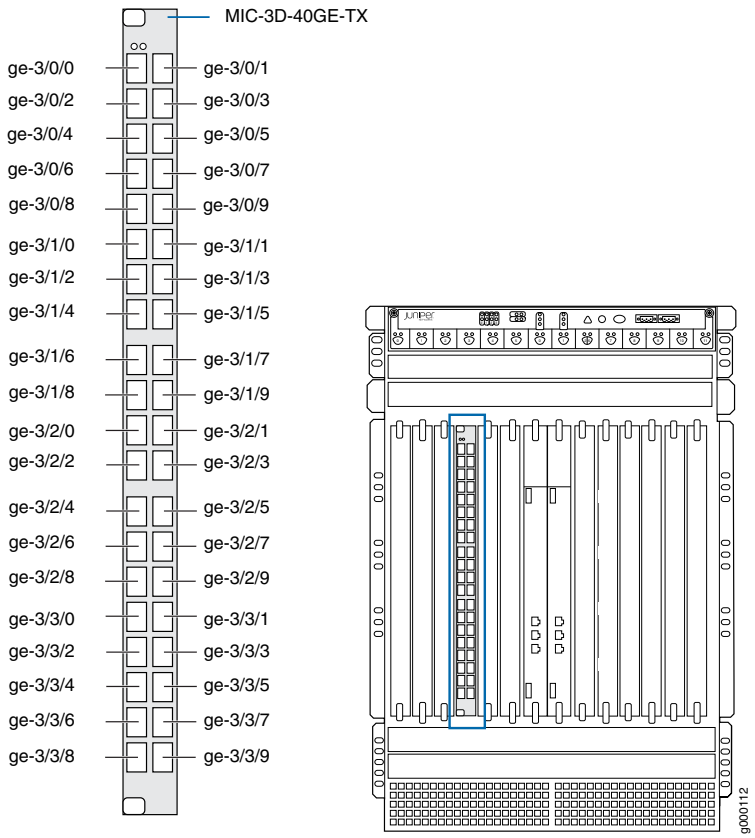

Figure 35: Port Numbering for the Tri-Rate MIC (MX480)

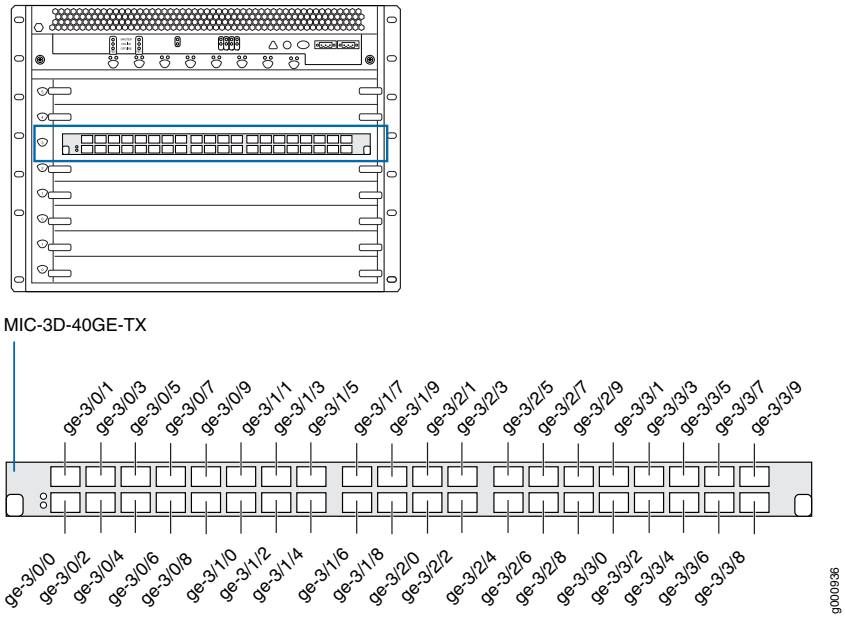

Figure 36: Port Numbering for the Tri-Rate MIC (MX240)

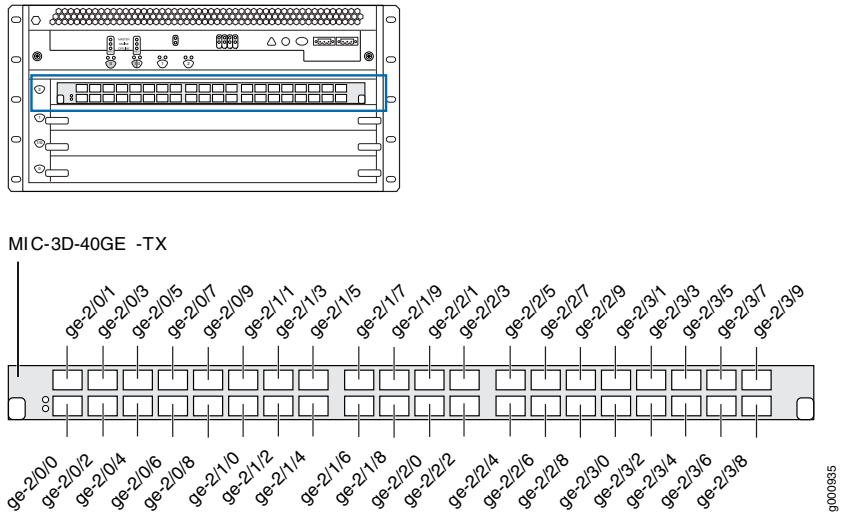

Related Documentation

- MX Series MIC Overview on page 17

Copyright © 2019, Juniper Networks, Inc.

MIC MRATE

Figure 37: 12-Port Multi-Rate MIC with QSFP+

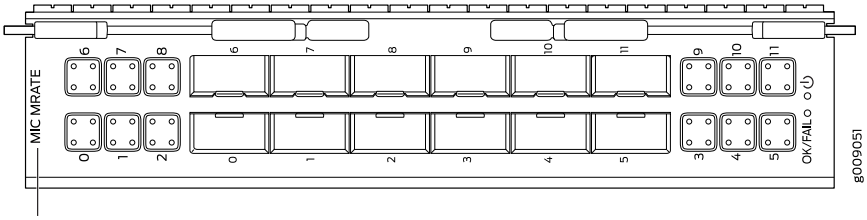

Software release	• Junos OS Release 15.1F5 with Junos Continuity • Junos OS release 16.1R1 and later For information about which MPCs support this MIC, see "MIC/MPC Compatibility" on page 26. For information about which MICs are supported on MX Series routers, see "MICs Supported by MX Series Routers" on page 18.

Description	• Twelve Gigabit Ethernet ports that support quad small form-factor pluggable plus (QSFP+) transceivers
	• Power requirement;
	  • When installed into MPC8E: 1.250 A @ 48 V (60 W)
	  • When installed into MPC9E, or into MPC8E operating in 1.6 Tbps upgrade mode (licensed feature): 1.771 A @ 48 V (85 W)
	• Weight: 3.9 lb (1.77 kg)
	• Model number: MIC-MRATE
	• Name in the CLI: **MRATE-12xQSFPP-XGE-XLGE-CGE**

Hardware features	• The ports are numbered **0** through **11**.
	• Twelve Gigabit Ethernet QSFP+ ports, each of which can be configured as a 40-Gigabit Ethernet port or as four 10-Gigabit Ethernet ports by using a breakout cable.
	• Eight out of the twelve ports can be configured as 100-Gigabit Ethernet ports. Port numbers **0** through **3**, and **6** through **9** are the eight 100-Gigabit Ethernet ports.
	• When used in MX2K-MPC8E:
	  • 4 ports out of the total 12 support 100-Gigabit Ethernet speed
	  • Maximum aggregate port capacity across ports **0** through **5** should not exceed 240 Gbps
	  • Maximum aggregate port capacity across ports 6 through 11 should not exceed 240 Gbps
	• When used in MX2K-MPC9E:
	  • 8 ports out of the total 12 support 100-Gigabit Ethernet speed
	  • Maximum aggregate port capacity across ports **0** through **5** should not exceed 400 Gbps
	  • Maximum aggregate port capacity across ports **6** through **11** should not exceed 400 Gbps
	
	Table 25 on page 204 lists the configurable Gbps Ethernet port speeds for each port.

Software features	• Supports rate selectability at the port level. • By default, the ports are configured as 10-Gigabit Ethernet ports. • Supports remote port identification.

Cables and connectors	TIP: You can use the Hardware Compatibility Tool to find information about the pluggable transceivers supported on your Juniper Networks device. The list of supported transceivers for the MX Series is located at https://pathfinder.juniper.net/hct/category/#catKey=100001&modelType;=All&pf;=MX+Series.

LEDs	• **OK/FAIL** LED, one bicolor:
	  • Steady green—MIC is functioning normally.
	  • Yellow—MIC has failed.
	• Link LED, one green per port (4 per QSFP+ cage):
	  • Steady green—Link is up.
	  • Off—Link is down or disabled.
	  Each QSFP+ cage contains four LEDs, logically numbered from 0 through 3. These numbers help you identify the corresponding cable when a breakout cable (4x10 Gigabit) is connected to a port. On an installed MRATE MIC, the orientation of these LEDs is as follows: upper left **0**, upper right **1**, lower left **2**, and lower right **3**.

Table 25: MIC MRATE Gigabit Ethernet Port Speed Capabilities

Port #	4x10 Gbps Ethernet	40 Gbps Ethernet	100 Gbps Ethernet
0	yes	yes	yes
1	yes	yes	yes
2	yes	yes	yes
3	yes	yes	yes
4	yes	yes	no
5	yes	yes	no
6	yes	yes	yes
7	yes	yes	yes
8	yes	yes	yes
9	yes	yes	yes
10	yes	yes	no
11	yes	yes	no

Related Documentation

- *Junos Continuity Software User Guide (Junos OS Release 14.1R4 and Later Releases)*
- *Understanding Interface Naming Conventions for MIC-MRATE*
- *Understanding Rate Selectability*

Copyright © 2019, Juniper Networks, Inc.

- *Configuring Rate Selectability on MIC-MRATE to Enable Different Port Speeds*

Multiservices MIC

Figure 38: MS-MIC-16G

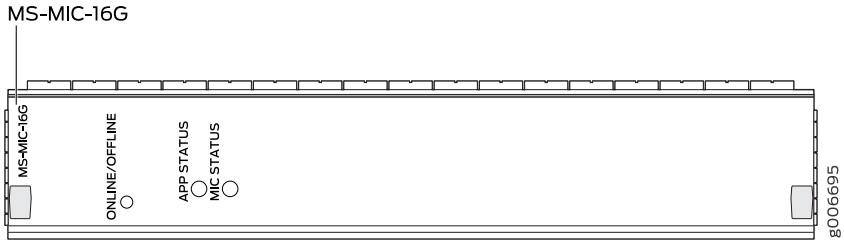

Supported Junos OS Release	• Junos OS Release 13.2 and later • Model number: MS-MIC-16G • Name in the CLI: **MS-MIC-16G**
Description	The Multiservices Modular Interfaces Card (MS-MIC) provides improved scaling and high performance for MX series routers. The MS-MIC has enhanced memory (16 GB) and enhanced processing capabilities.
Software Features	• Active flow monitoring and export of flow monitoring version 9 records based on RFC 3954 • IP Security (IPsec) encryption • Network Address Translation (NAT) for IP addresses NOTE: The Multiservices MIC does not support Network Address Translation-Traversal (NAT-T) until Junos OS Release 17.4R1. • Port Address Translation (PAT) for port numbers • Traffic sampling • Stateful firewall with packet inspection—detects SYN attacks, ICMP and UDP floods, and ping-of-death attacks • Network Attack Protection (NAP) • Support for up to 6000 service sets • Support for MTUs up to 9192 bytes. • Multiple services can be supported. See *Junos OS Services Interfaces Library for Routing Devices* for more information. • See "Protocols and Applications Supported by the MS-MIC and MS-MPC" on page 340 for information about the protocols and applications that this MIC supports.
Hardware Features and Requirements	• MICs are hot-removable and hot-insertable • MS-MIC CPU Clock Cycle – 800MHz • Works with SBCs and SBCEs • Interoperable with MS-DPCs. Both MS-MPCs and MS-DPCs can co-exist in the same chassis • Chassis requires enhanced fan trays and high-capacity DC or AC power supplies NOTE: Only one Multiservices MIC is supported in each MPC. NOTE: Starting in Junos OS Release 13.3R3, 14.1R2, and 14.2R1, MX104 routers support only two Multiservices MICs.

Input/Output Power Requirements	MS-MIC—6.67 amps @ 9V (60W)
Weight and Dimensions	Weight: 2 lbs (.91 kg); Height: 0.9 in. (2.26 cm); Width: 6 in. (15.24 cm); Depth: 7 in. (17.78 cm)
LEDs	Application activity tricolor LED, labeled **APP STATUS**: • Off—Application is not running. • Red—Application has failed. • Yellow—Application is reconfiguring. • Green—Application is running. MIC activity tricolor LED, labeled **MIC STATUS**: • Off—MIC has failed. • Red—MIC has an error or failure. • Yellow—MIC is transitioning online or offline. • Green—MIC is functioning normally.

Related Documentation

- Multiservices MPC on page 86
- MX Series MIC Overview on page 17
- *Junos OS Services Interfaces Library for Routing Devices*
- Protocols and Applications Supported by the MS-MIC and MS-MPC on page 340
- MIC/MPC Compatibility on page 26
- *Example: Inter-Chassis Stateful High Availability for NAT and Stateful Firewall (MS-MIC, MS-MPC)*
- *Example: Configuring Flow Monitoring on an MX Series Router with MS-MIC and MS-MPC*
- *Inter-Chassis High Availability for MS-MIC and MS-MPC (Release 15.1 and earlier)*
- *Example: Configuring Junos VPN Site Secure on MS-MIC and MS-MPC*
- *ICMP, Ping, and Traceroute ALGs for MS-MICs and MS-MPCs*
- MICs Supported by MX Series Routers on page 18

SONET/SDH OC3/STM1 (Multi-Rate) MICs with SFP

Figure 39: 4-Port SONET/SDH OC3/STM1 (Multi-Rate) MIC with SFP

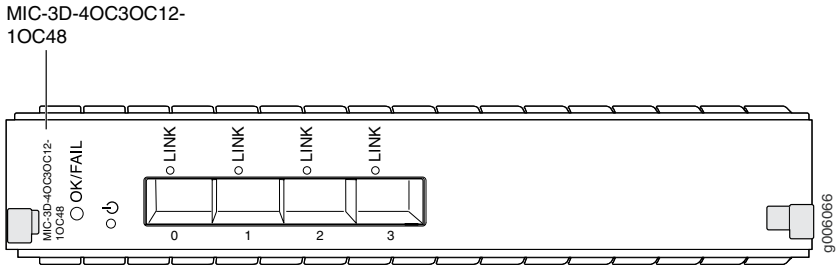

Copyright © 2019, Juniper Networks, Inc.

Figure 40: 8-Port SONET/SDH OC3/STM1 (Multi-Rate) MIC with SFP

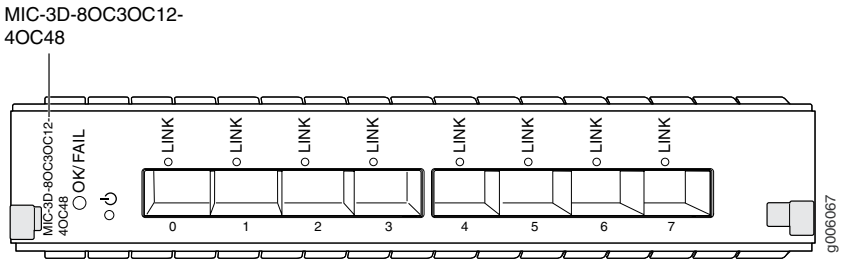

Software release	• 4-port: Junos OS Release 11.2 and later • 8-port: Junos OS Release 11.2 and later For information on which MPCs support these MICs, see "MIC/MPC Compatibility" on page 26. For information on which MICs are supported on MX Series routers, see "MICs Supported by MX Series Routers" on page 18.

Description	• 4-port: 4 OC3/STM1 or OC12/STM4 ports
	The ports can be configured to support a combination of OC3, OC12, and OC48 rates. In the combination, you can configure only one port (port 0) to support OC48, whereas OC3 or OC12 can be configured on all four ports.
	• 8-port: 8 OC3/STM1 or OC12/STM4 ports
	The ports can be configured to support a combination of OC3, OC12, and OC48 rates. In the combination, you can configure only two ports (port 0 and port 1) to support OC48 , whereas OC3 or OC12 can be configured on all eight ports.
	• Power requirement:
	  • 4-port: 2.6 A @ 9 V (23.4 W)
	  • 8-port: 3.1 A @ 9 V (27.9 W)
	• Weight:
	  • 4-port: 1.27 lb (0.58 kg)
	  • 8-port: 1.47 lb (0.67 kg)
	• Model number:
	  • 4-port: MIC-3D-4OC3OC12-1OC48
	  • 8-port: MIC-3D-8OC3OC12-4OC48

Hardware features	• The ports are labeled:
	  • 4-port: 0-3
	  • 8-port: 0-7
	• Maximum transmission units (MTUs) of up to 9192 bytes

Software features	• Per-port SONET/SDH framing
	• Local and remote loopback on each port
	• Optical diagnostics and monitoring
	• Clocking options: internal or external/loop mode.
	• Unified in-service software upgrade (unified ISSU)
	• Encapsulations:
	  ◦ Multiprotocol Label Switching (MPLS) fast reroute
	  ◦ MPLS CCC (circuit cross-connect)
	  ◦ MPLS TCC (translational cross-connect)
	  ◦ Cisco High-Level Data Link Control
	  ◦ Cisco HDLC CCC
	  ◦ Cisco HDLC TCC
	  ◦ Point-to-Point Protocol (PPP)
	  ◦ PPP for CCC
	  ◦ PPP for TCC
	  ◦ Flexible Frame Relay
	  ◦ Frame Relay
	  ◦ Frame Relay for CCC
	  ◦ Frame Relay for TCC
	  ◦ PPP over Frame Relay
	
	NOTE: Ethernet over Frame Relay is not supported.

Cables and connectors	TIP: You can use the Hardware Compatibility Tool to find information about the pluggable transceivers supported on your Juniper Networks device. The list of supported transceivers for the MX Series is located at https://pathfinder.juniper.net/hct/category/#catKey=100001&modelType;=All&pf;=MX+Series.
LEDs	**OK/FAIL** LED, one bicolor: • Green—MIC is functioning normally • Red—MIC has failed **LINK** LED, one green per port: • Off—Not enabled • Green—Online with no alarms or failures • Yellow—Online with alarms for remote failures • Red—Active with a local alarm; router has detected a failure

Copyright © 2019, Juniper Networks, Inc.

Alarms, errors, and events	SONET alarms: • Loss of light (LOL) • Loss of signal (LOS) • Loss of frame (LOF) • Phase lock loop (PLL) • Severely errored frame (SEF) • Alarm indicator signal–line (AIS-L) • Alarm indicator signal–path (AIS-P) • Remote defect indicator–line (RDI-L) • Remote defect indicator–path (RDI-P) • Loss of pointer–path (LOP-P) • Bit error rate–signal degrade (BERR-SD) • Bit error rate–signal fail (BERR-SF) • Payload label mismatch–Path (PLM-P) • Unequipped–path (UNEQ-P) • Remote error indicator–path (REI-P) SDH alarms: • Loss of light (LOL) • Phase lock loop (PLL) • Loss of frame (LOF) • Loss of signal (LOS) • Severely errored frame (SEF) • Multiplex-section alarm indicator signal (MS-AIS) • H Path alarm indicator signal (HP-AIS) • Loss of pointer (LOP) • Bit error rate–signal degrade (BER-SD) • Bit error rate–signal fail (BER-SF) • Multiplex section–far end receive failure (MS-FERF) • High order path–far end receive failure (HP-FERF) • High order path–payload label mismatch (HP-PLM) • Remote error indicator (REI) • Unequipped (UNEQ)

Related Documentation

- MX Series MIC Overview on page 17

Multi-Rate Ethernet MIC

Figure 41: JNP-MIC

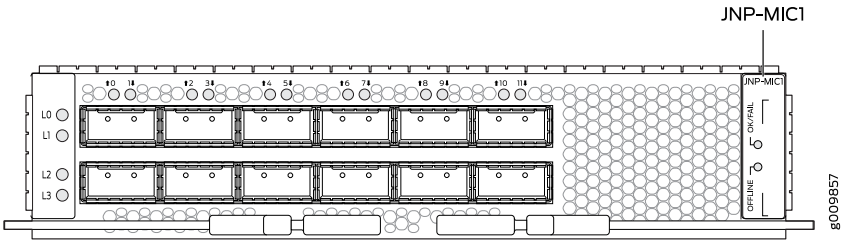

Figure 42: JNP-MIC1-MACSEC

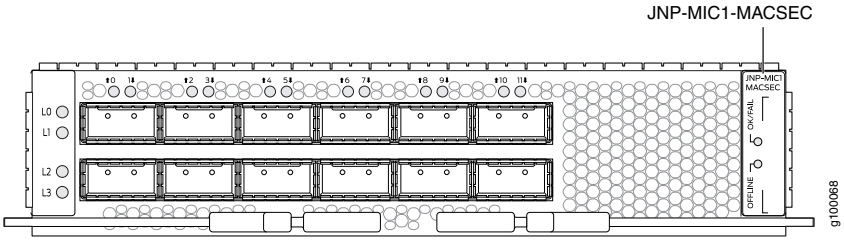

Figure 43: MIC-MACSEC-MRATE

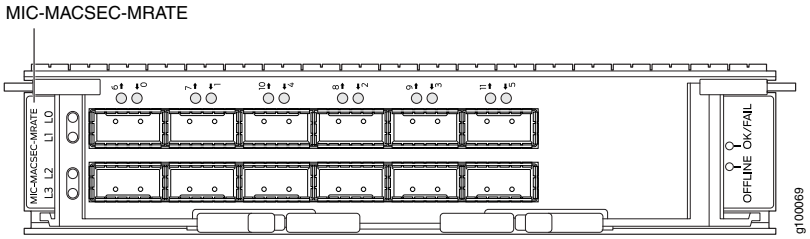

Software release	• JNP-MIC1: Junos OS release 17.3R1 and later • JNP-MIC1-MACSEC: Junos OS release 17.3R2 and later • MIC-MACSEC-MRATE: Junos OS release 17.4R1 and later For information about which MPCs support this MIC, see "MIC/MPC Compatibility" on page 26. For information about which MICs are supported on MX Series routers, see "MICs Supported by MX Series Routers" on page 18.

Copyright © 2019, Juniper Networks, Inc.

Description	• Weight: 3 lb (1.36 kg) • Model numbers: Without MACsec support: JNP-MIC1 With MACsec support: JNP-MIC1-MACSEC With MACsec support: MIC-MACSEC-MRATE • Power requirement: ◦ JNP-MIC1: 85 W at 55º C 80 W at 25º C ◦ JNP-MIC1-MACSEC: 130 W at 55º C 125 W at 25º C ◦ MIC-MACSEC-MRATE: 110 W at 45º C 105 W at 25º C • Name in the CLI: JNP-MIC1: **MIC1** JNP-MIC1-MACSEC: **MIC1-MACSEC** MIC-MACSEC-MRATE: **MACSEC-12xQSFPP-XGE-XLGE-CGE**
Hardware features	• JNP-MIC1 and JNP-MIC1-MACSEC: ◦ Twelve 100-Gigabit Ethernet ports that support quad small form-factor pluggable (QSFP28) transceivers ◦ The ports are numbered **0** through **11**. ◦ Each port can be configured as a 100-Gigabit Ethernet port, 40-Gigabit Ethernet port, or as four 10-Gigabit Ethernet ports (by using a breakout cable). Table 26 on page 212 lists the configurable Gigabit Ethernet port speeds for each port. • MIC-MACSEC-MRATE: ◦ Twelve Gigabit Ethernet QSFP+ ports, each of which can be configured as a 40-Gigabit Ethernet port or as four 10-Gigabit Ethernet ports (by using a breakout cable). ◦ The ports are numbered **0** through **11**. ◦ Eight out of the twelve ports can be configured as 100-Gigabit Ethernet ports. Port numbers **0** through **3**, and **6** through **9** are the eight 100-Gigabit Ethernet ports. ◦ When used in MP8CE: • Four ports out of the total twelve ports support 100-Gigabit Ethernet speed • Maximum aggregate port capacity across ports **0** through **5** should not exceed 240 Gbps • Maximum aggregate port capacity across ports **6** through **11** should not exceed 240 Gbps ◦ When used in MPC9E: • Eight ports out of the total twelve ports support 100-Gigabit Ethernet speed • Maximum aggregate port capacity across ports **0** through **5** should not exceed 400 Gbps • Maximum aggregate port capacity across ports **6** through **11** should not exceed 400 Gbp Table 27 on page 212 lists the configurable Gigabit Ethernet port speeds for each port.
Software features	• Supports rate selectability at the port level. • By default, the ports are configured as 10-Gigabit Ethernet ports. • Supports remote port identification. • MICs with model numbers JNP-MIC1-MACSEC and MIC-MACSEC-MRATE support Media Access Control Security (MACsec)

Cables and connectors	TIP: You can use the Hardware Compatibility Tool to find information about the pluggable transceivers supported on your Juniper Networks device. The list of supported transceivers for the MX Series is located at https://pathfinder.juniper.net/hct/category/#catKey=100001&modelType;=All&pf;=MX+Series.

LEDs	• **OK/FAIL** LED, one bicolor:
	  • OFF—MIC is offline or MIC has fault.
	  • Red—MIC is in power failure state.
	  • Green—MIC is online.
	• Link LED, one green per port:
	  • Steady green—Link is up.
	  • Off—Link is down or disabled.
	• Like port status LED, each individual lane LED support four states as: OFF, AMBER, GREEN, RED. See *MPC and MIC Lane LED Scheme Overview* for more details.

Table 26: Multi Rate Ethernet MIC Port Speed Capabilities for JNP-MIC1 and JNP-MIC1-MACSEC

Port #	4x10-Gigabit Ethernet	40-Gigabit Ethernet	100-Gigabit Ethernet
0	yes	yes	yes
1	yes	yes	yes
2	yes	yes	yes
3	yes	yes	yes
4	yes	yes	yes
5	yes	yes	yes
6	yes	yes	yes
7	yes	yes	yes
8	yes	yes	yes
9	yes	yes	yes
10	yes	yes	yes
11	yes	yes	yes

Table 27: Multi Rate Ethernet MIC Port Speed Capabilities for MIC-MACSEC-MRATE

Port #	4x10-Gigabit Ethernet	40-Gigabit Ethernet	100-Gigabit Ethernet
0	yes	yes	yes

Copyright © 2019, Juniper Networks, Inc.

Table 27: Multi Rate Ethernet MIC Port Speed Capabilities for MIC-MACSEC-MRATE (continued)

Port #	4x10-Gigabit Ethernet	40-Gigabit Ethernet	100-Gigabit Ethernet
1	yes	yes	yes
2	yes	yes	yes
3	yes	yes	yes
4	yes	yes	no
5	yes	yes	no
6	yes	yes	yes
7	yes	yes	yes
8	yes	yes	yes
9	yes	yes	yes
10	yes	yes	no
11	yes	yes	no

Related Documentation

- *MPC and MIC Lane LED Scheme Overview*
- *Configuring Rate Selectability on MX10003 MPC to Enable Different Port Speeds*
- *MX10003 MPC Rate-Selectability Overview*
- *Understanding Rate Selectability*

Multi-Rate Ethernet MACSEC MIC

Figure 44: MIC-MACSEC-MRATE

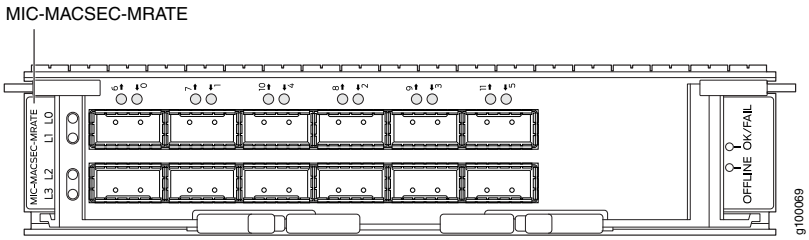

Software release	Junos OS release 17.4R1 and later For information about which MPCs support this MIC, see "MIC/MPC Compatibility" on page 26. For information about which MICs are supported on MX Series routers, see "MICs Supported by MX Series Routers" on page 18.

Description	• Weight: 3 lb (1.36 kg) • Model number: MIC-MACSEC-MRATE • Power requirement: 110 W at 45° C 105 W at 25° C • Name in the CLI: **MACSEC-12xQSFPP-XGE-XLGE-CGE**
Hardware features	• Twelve Gigabit Ethernet QSFP+ ports, each of which can be configured as a 40-Gigabit Ethernet port or as four 10-Gigabit Ethernet ports (by using a breakout cable). • The ports are numbered **0** through **11**. • Eight out of the twelve ports can be configured as 100-Gigabit Ethernet ports. Port numbers **0** through **3**, and **6** through **9** are the eight 100-Gigabit Ethernet ports. • When used in MP8CE: ◦ Four ports out of the total twelve ports support 100-Gigabit Ethernet speed ◦ Maximum aggregate port capacity across ports **0** through **5** should not exceed 240 Gbps ◦ Maximum aggregate port capacity across ports **6** through **11** should not exceed 240 Gbps • When used in MPC9E: ◦ Eight ports out of the total twelve ports support 100-Gigabit Ethernet speed ◦ Maximum aggregate port capacity across ports **0** through **5** should not exceed 400 Gbps ◦ Maximum aggregate port capacity across ports **6** through **11** should not exceed 400 Gbp • Table 27 on page 212 lists the configurable Gigabit Ethernet port speeds for each port.
Software features	• Supports rate selectability at the port level. • By default, the ports are configured as 10-Gigabit Ethernet ports. • Supports remote port identification. • Supports Media Access Control Security (MACsec)
Cables and connectors	TIP: You can use the Hardware Compatibility Tool to find information about the pluggable transceivers supported on your Juniper Networks device. The list of supported transceivers for the MX Series is located at https://pathfinder.juniper.net/hct/category/#catKey=100001&modelType;=All&pf;=MX+Series.
LEDs	• **OK/FAIL** LED, one bicolor: ◦ OFF—MIC is offline or MIC has fault. ◦ Red—MIC is in power failure state. ◦ Green—MIC is online. • Link LED, one green per port: ◦ Steady green—Link is up. ◦ Off—Link is down or disabled. • Like port status LED, each individual lane LED support four states as: OFF, AMBER, GREEN, RED. See *MPC and MIC Lane LED Scheme Overview* for more details.

Table 28: Multi Rate Ethernet MIC Port Speed Capabilities for MIC-MACSEC-MRATE

Port #	4x10-Gigabit Ethernet	40-Gigabit Ethernet	100-Gigabit Ethernet
0	yes	yes	yes

Copyright © 2019, Juniper Networks, Inc.

Table 28: Multi Rate Ethernet MIC Port Speed Capabilities for MIC-MACSEC-MRATE (continued)

Port #	4x10-Gigabit Ethernet	40-Gigabit Ethernet	100-Gigabit Ethernet
1	yes	yes	yes
2	yes	yes	yes
3	yes	yes	yes
4	yes	yes	no
5	yes	yes	no
6	yes	yes	yes
7	yes	yes	yes
8	yes	yes	yes
9	yes	yes	yes
10	yes	yes	no
11	yes	yes	no

Related Documentation

- *MPC and MIC Lane LED Scheme Overview*

SONET/SDH OC192/STM64 MIC with XFP

Figure 45: SONET/SDH OC192/STM64 MIC with XFP

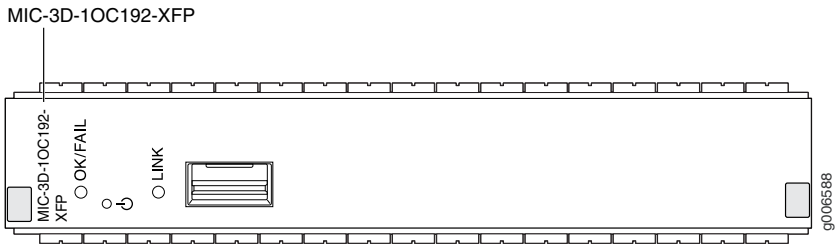

Software release	• Junos OS Release 12.2 and later For information on which MPCs support this MIC, see "MIC/MPC Compatibility" on page 26. For information on which MICs are supported on MX Series routers, see "MICs Supported by MX Series Routers" on page 18.

Description	• One OC192 port • Clear channel functionality • Power requirement: 4.25 A @ 9 V (38.25 W) • Weight: 1.34 lb (0.61 kg) • Model number: MIC-3D-1OC192-XFP
Hardware features	• Maximum transmission units (MTUs) of up to 9192 bytes • MIC bandwidth of up to 10 Gbps

Software features	• SONET/SDH framing
	• Multiprotocol Label Switching (MPLS) fast reroute
	• Ingress behavior aggregate (BA) classification
	• Internal and loop clocking
	• Encapsulations:
	  ◦ MPLS fast reroute
	  ◦ MPLS CCC (circuit cross-connection)
	  ◦ MPLS TCC (translational cross-connection)
	  ◦ Cisco High-Level Data Link Control (cHDLC)
	  ◦ Cisco HDLC CCC
	  ◦ Cisco HDLC TCC
	  ◦ Point-to-Point Protocol (PPP)
	  ◦ PPP for CCC
	  ◦ PPP for TCC
	  ◦ Flexible Frame Relay
	  ◦ Frame Relay
	  ◦ Frame Relay for CCC
	  ◦ Frame Relay for TCC
	  ◦ PPP over Frame Relay
	
	NOTE: Ethernet over Frame Relay is not supported.

Cables and connectors	TIP: You can use the Hardware Compatibility Tool to find information about the pluggable transceivers supported on your Juniper Networks device. The list of supported transceivers for the MX Series is located at https://pathfinder.juniper.net/hct/category/#catKey=100001&modelType;=All&pf;=MX+Series. NOTE: To extend the life of the laser, when a MIC is not being actively used with any valid links, take the MIC offline until you are ready to establish a link to another device. For information about taking a MIC offline, see the **request chassis pic offline** command in the CLI Explorer.
LEDs	**OK/FAIL** LED, one bicolor: • Green—MIC is functioning normally • Red—MIC has failed **LINK** LED, one tricolor per port: • Off—Not enabled • Green—Online with no alarms or failures • Yellow—Online with alarms for remote failures • Red—Active with a local alarm; router has detected a failure

Copyright © 2019, Juniper Networks, Inc.

Alarms, errors, and events	SONET alarms: • Loss of light (LOL) • Phase lock loop (PLL) • Loss of signal (LOS) • Loss of frame (LOF) • Severely errored frame (SEF) • Alarm indicator signal–line (AIS-L) • Alarm indicator signal–path (AIS-P) • Remote defect indicator–line (RDI-L) • Remote defect indicator–path (RDI-P) • Loss of pointer–path (LOP-P) • Bit error rate–signal degrade (BERR-SD) • Bit error rate–signal fail (BERR-SF) • Payload label mismatch–Path (PLM-P) • Unequipped–path (UNEQ-P) • Remote error indicator–path (REI-P) SDH alarms: • Loss of light (LOL) • Phase lock loop (PLL) • Loss of frame (LOF) • Loss of signal (LOS) • Severely errored frame (SEF) • Multiplex-section alarm indicator signal (MS-AIS) • Higher order path–alarm indication signal (HP-AIS) • Loss of pointer (LOP) • Bit error rate–signal degrade (BER-SD) • Bit error rate–signal fail (BER-SF) • Multiplex section–far end receive failure (MS-FERF) • Higher order path—far-end receive failure (HP-FERF) • Higher order path—payload label mismatch (HP-PLM) • Remote error indicator (REI) • Unequipped (UNEQ)

Related Documentation

- MX Series MIC Overview on page 17

Copyright © 2019, Juniper Networks, Inc.

CHAPTER 10

MX Series PIC Descriptions

- Channelized OC12/STM4 Enhanced IQ (IQE) PIC with SFP on page 219
- Channelized OC48/STM16 Enhanced IQ (IQE) PIC with SFP on page 220
- SONET/SDH OC3/STM1 (Multi-Rate) PIC with SFP on page 226
- SONET/SDH OC12/STM4 (Multi-Rate) PIC with SFP on page 229
- SONET/SDH OC48/STM16 Enhanced IQ (IQE) PIC with SFP on page 232
- SONET/SDH OC48/STM16 (Multi-Rate) PIC with SFP on page 236
- SONET/SDH OC48/STM16 PIC with SFP on page 239
- SONET/SDH OC192c/STM64 PIC on page 242
- SONET/SDH OC192c/STM64 PIC with XFP on page 245

Channelized OC12/STM4 Enhanced IQ (IQE) PIC with SFP

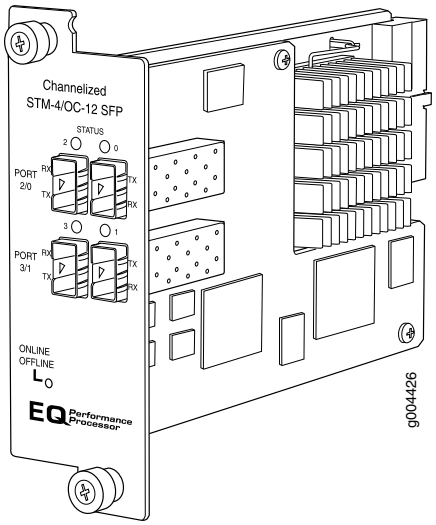

Software release	• Junos 9.5 and later

Related Documentation

- MX Series FPC and PIC Overview on page 35
- FPCs Supported by MX240, MX480, and MX960 Routers on page 36

- PICs Supported by MX240, MX480, and MX960 Routers on page 37
- High Availability Features on page 36

Channelized OC48/STM16 Enhanced IQ (IQE) PIC with SFP

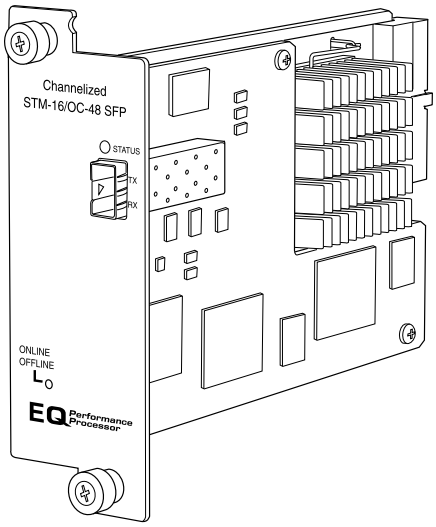

Software release	• Junos 9.5 and later

Description	• One OC48/STM16 port
	• SONET or SDH is configurable on a per-port granularity
	• SONET channelization:
	  • 4 OC12 channel
	  • 16 OC3 channels
	  • 48 DS3 channels
	  • 672 DS1 channels
	  • 975 DS0 channels
	• SDH channelization:
	  • 4 STM4 channel
	  • 16 STM1 channels
	  • 48 E3 channels
	  • 504 E1 channels
	  • 975 DS0 channels
	• Power requirement: 1.10 A @ 48V (53 W)
	• Model Number: PB-1CHOC48-STM16-IQE-SFP

Hardware features	• Port is numbered 0.

Copyright © 2019, Juniper Networks, Inc.

Software features	• Quality of service (QoS) per channel: weighted round-robin (WRR), random early detection (RED), weighted random early detection (WRED)
	• Enhanced fine-grained queuing per logical interface. See the *Class of Service Feature Guide (Routers and EX9200 Switches)* for more information about class of service features.
	• Subrate and scrambling:
	  • Digital Link/Quick Eagle
	  • Kentrox
	  • Larscom
	  • ADTRAN
	  • Verilink
	• Packet buffering, Layer 2 parsing
	• M13/C-bit parity encoding
	• DS3 far-end alarm and control (FEAC) channel support
	• Local line, remote line, and remote payload loopback testing
	• Simple Network Management Protocol (SNMP): OC12, OC3 MIB, DS3 MIB, T1 MIB
	• Dynamic, arbitrary channel configuration
	• Full bit error rate test (BERT)
	• Encapsulations:
	  • Circuit cross-connect (CCC)
	  • Translational cross-connect (TCC)
	  • Extended Frame Relay for CCC and TCC
	  • Flexible Frame Relay
	  • Frame Relay
	  • Frame Relay for CCC
	  • Frame Relay for TCC
	  • Frame Relay port CCC
	  • High-Level Data Link Control (HDLC)
	  • HDLC framing for CCC
	  • HDLC framing for TCC
	  • MPLS CCC
	  • MPLS TCC
	  • Multilink Frame Relay (MLFR) UNI NNI (MFR FRF.16)
	  • Point-to-Point Protocol (PPP)
	  • PPP for CCC
	  • PPP for TCC
	• Encapsulations available only for DS1:
	  • Multilink Frame Relay end-to-end (MLFR FRF.15)
	  • Multilink PPP (MLPPP)
	  • PPP over Frame Relay

Cables and connectors	TIP: You can use the Hardware Compatibility Tool to find information about the pluggable transceivers supported on your Juniper Networks device. The list of supported transceivers for the MX Series is located at https://pathfinder.juniper.net/hct/category/#catKey=100001&modelType;=All&pf;=MX+Series.

LEDs	One tricolor per port: • Off—Not enabled • Green—Online with no alarms or failures • Yellow—Online with alarms for remote failures • Red—Active with a local alarm; router has detected a failure

Copyright © 2019, Juniper Networks, Inc.

Alarms, errors, and events

SONET alarms:

- Alarm indication signal—line (AIS-L)
- Alarm indication signal—path (AIS-P)
- Bit error rate—signal degrade (BERR-SD)
- Bit error rate—signal fail (BERR-SF)
- Loss of frame (LOF)
- Loss of light (LOL)
- Loss of pointer (LOP)
- Loss of signal (LOS)
- Payload label mismatch (PLM-P)
- Remote defect indication—line (RDI-L)
- Remote defect indication—path (RDI-P)
- Remote error indication (REI)
- Payload unequipped (unequipped STS at path level) (UNEQ-P)
- Virtual container—alarm indication signal (VAIS)
- Virtual container—loss of pointer (VLOP)
- Virtual container—mismatch (VMIS)
- Virtual container—remote defect indication (VRD1)
- Virtual container—unequipped (VUNEQ)

  SDH alarms:

  - Administrative unit alarm indication signal (AU-AIS)
  - Bit error rate—signal degrade (BERR-SD)
  - Bit error rate—signal fail (BERR-SF)
  - Bit interleaved parity (BIP) error B1, B2, B3
  - Higher order path—alarm indication signal (HP-AIS)
  - Higher order path—far-end receive failure (HP-FERF)
  - Higher order path—payload label mismatch (HP-PLM)
  - Higher order path—loss of pointer (HP-LOP)
  - Higher order path—remote defect indication (HP-RDI)
  - Higher order path—unequipped (HP-UNEQ)
  - Loss of frame (LOF)
  - Loss of light (LOL)
  - Loss of signal (LOS)
  - Multiplex section—alarm indication signal (MS-AIS)
  - Multiplex section—far-end receive failure (MS-FERF)
  - Multiplex section—remote defect indication (MS-RDI)
  - Multiplex section—remote error indication (MS-REI)
  - Phase lock loop (PLL)
  - Remote error indication (REI)
  - Severely errored frame (SEF)
  - Tributary unit—alarm indication signal (TU-AIS)
  - Tributary unit—loss of pointer (TU-LOP)
  - Tributary unit—mismatch (TU-MIS)
  - Tributary unit—remote defect indication (TU-RD1)
  - Tributary unit—unequipped (TU-UNEQ)

  DS1 alarms:

Copyright © 2019, Juniper Networks, Inc.

- Alarm indication signal (AIS)
- Loss of frame (LOF)
- Remote alarm indication signal (RAIS)
- DS1 error detection:
  - Bursty errored seconds (BES)
  - CRC errors
  - Errored seconds (ES)
  - Line errored seconds (LES)
  - Loss of framing seconds (LOFS)
  - Severely errored seconds (SES)
  - Severely errored framing seconds (SEFS)
  - Unavailable seconds (UAS)
  - DS3 alarms:
    - Alarm indication signal (AIS)
    - Loss of frame (LOF)
    - Yellow alarm
  - DS3 error detection:
    - C-bit code violations (CCV)
    - C-bit errored seconds (CES)
    - C-bit severely errored framing seconds (CEFS)
    - CRC errors
    - Excessive zeros (EXZ)
    - Far-end block error (FEBE)
    - Far-end receive failure (FERF)
    - Line errored seconds (LES)
    - Parity bit (P-bit) code violations (PCV)
    - Parity bit (P-bit) errored seconds (PES)
    - Parity bit (P-bit) severely errored framing seconds (PSES)
    - Severely errored framing seconds (SEFS)
    - Unavailable seconds (UAS)

Instrumentation (counters)	• Layer 2 per-queue and per-channel packet and byte counters

Related Documentation

- MX Series FPC and PIC Overview on page 35
- FPCs Supported by MX240, MX480, and MX960 Routers on page 36
- PICs Supported by MX240, MX480, and MX960 Routers on page 37
- High Availability Features on page 36

Copyright © 2019, Juniper Networks, Inc.

SONET/SDH OC3/STM1 (Multi-Rate) PIC with SFP

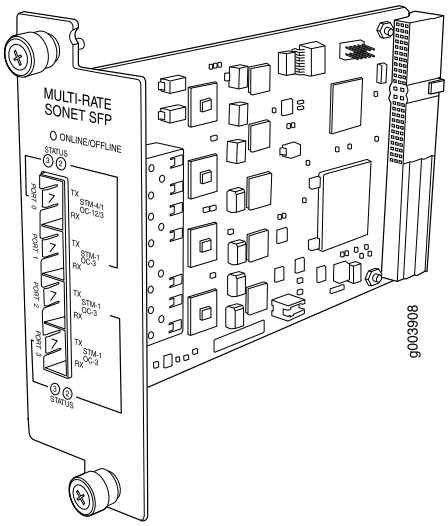

Software release	• Junos 9.5 and later

Description	• Rate-selectable using one of the following rates:
	  • 1-port OC12/STM4
	  • 1-port OC12c/STM4c
	  • 4-port OC3c/STM1c
	• Power requirement: 0.40 A @ 48 V (19 W)
	• Model Number: PB-4OC3-1OC12-SON-SFP

Hardware features	• Multiplexing and demultiplexing • Rate policing on input • Rate shaping on output • Packet buffering, Layer 2 parsing

Software features	• Optical diagnostics and related alarms
	• Per-port SONET/SDH framing
	• Link aggregation
	• Alarm and event counting and detection
	• Dual-router automatic protection switching (APS)
	• Multiprotocol Label Switching (MPLS) fast reroute
	• Encapsulations:
	  • Circuit cross-connect (CCC)
	  • Translational cross-connect (TCC)
	  • Frame Relay
	  • High-Level Data Link Control (HDLC)
	  • Point-to-Point Protocol (PPP)

Copyright © 2019, Juniper Networks, Inc.

Cables and connectors	TIP: You can use the Hardware Compatibility Tool to find information about the pluggable transceivers supported on your Juniper Networks device. The list of supported transceivers for the MX Series is located at https://pathfinder.juniper.net/hct/category/#catKey=100001&modelType;=All&pf;=MX+Series. NOTE: To extend the life of the laser, when a PIC is not being actively used with any valid links, take the PIC offline until you are ready to establish a link to another device. For information about taking a PIC offline, see the **request chassis pic offline** command in the CLI Explorer.
LEDs	One tricolor per port: • Off—Not enabled • Green—Online with no alarms or failures • Yellow—Online with alarms for remote failures • Red—Active with a local alarm; router has detected a failure

Alarms, errors, and events	• SONET alarms:
	  • Alarm indication signal—line (AIS-L)
	  • Alarm indication signal—path (AIS-P)
	  • Bit error rate—signal degrade (BERR-SD)
	  • Bit error rate—signal fail (BERR-SF)
	  • Bit interleaved parity (BIP) error B1, B2, B3
	  • Far-end bit error: remote error indication—line (REI-L), far-end line coding violations (CV-LFE)
	  • Far-end bit error: remote error indication—path (REI-P), far-end path coding violations (CV-PFE)
	  • Loss of frame (LOF)
	  • Loss of pointer (LOP-P)
	  • Loss of signal (LOS)
	  • Payload label mismatch (PLM-P)
	  • Payload unequipped (unequipped STS at path level) (UNEQ-P)
	  • Remote defect indication—line (RDI-L)
	  • Remote defect indication—path (RDI-P)
	• SDH alarms:
	  • Administrative unit alarm indication signal (AU-AIS)
	  • Bit error rate signal degrade (BERR-SD)
	  • Bit error rate signal fail (BERR-SF)
	  • Bit interleaved parity (BIP) error B1, B2, B3
	  • Higher order path—payload label mismatch (HP-PLM)
	  • Higher order path—loss of pointer (HP-LOP)
	  • Higher order path—remote defect indication (HP-RDI)
	  • Higher order path—unequipped (HP-UNEQ)
	  • Loss of frame (LOF)
	  • Loss of signal (LOS)
	  • Multiplex section—alarm indication signal (MS-AIS)
	  • Multiplex section—remote defect indication (MS-RDI)
	  • Multiplex section—remote error indication (MS-REI)
	• Error detection:
	  • Errored seconds (ES-S, ES-L, ES-P)
	  • Far-end errored seconds (ES-LFE, ES-PFE)
	  • Far-end severely errored seconds (SES-LFE, SES-PFE)
	  • Far-end unavailable seconds (UAS-LFE, UAS-PFE)
	  • Severely errored frames (SEF)
	  • Severely errored framing seconds (SEFS-S)
	  • Severely errored seconds (SES-S, SES-L, SES-P)
	  • Unavailable seconds (UAS-L, UAS-P)

Related Documentation

- MX Series FPC and PIC Overview on page 35
- FPCs Supported by MX240, MX480, and MX960 Routers on page 36
- PICs Supported by MX240, MX480, and MX960 Routers on page 37
- High Availability Features on page 36

Copyright © 2019, Juniper Networks, Inc.

SONET/SDH OC12/STM4 (Multi-Rate) PIC with SFP

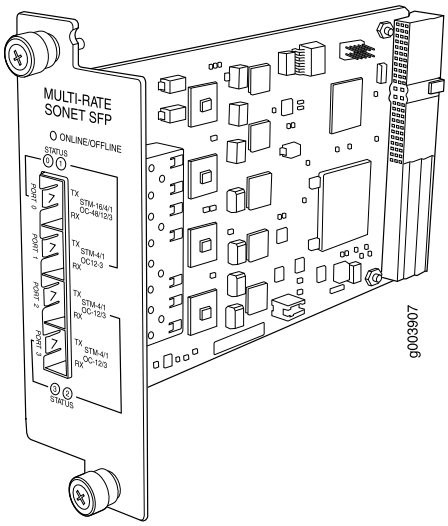

Software release	• Junos 9.5 and later

Description	• Rate-selectable using one of the following rates:
	  • 1-port OC12
	  • 1-port OC48
	  • 1-port OC48c
	  • 4-port OC3c
	  • 4-port OC12c
	• Power requirement: 0.40 A @ 48 V (19 W)
	• Model Number: PB-4OC3-4OC12-SON-SFP

Hardware features	• Multiplexing and demultiplexing • Rate policing on input • Rate shaping on output • Packet buffering, Layer 2 parsing

Software features	• Optical diagnostics and related alarms
	• Per-port SONET/SDH framing
	• Link aggregation
	• Alarm and event counting and detection
	• Dual-router automatic protection switching (APS)
	• Multiprotocol Label Switching (MPLS) fast reroute
	• Encapsulations:
	  • Circuit cross-connect (CCC)
	  • Translational cross-connect (TCC)
	  • Frame Relay
	  • High-Level Data Link Control (HDLC)
	  • Point-to-Point Protocol (PPP)

Copyright © 2019, Juniper Networks, Inc.

Cables and connectors	TIP: You can use the Hardware Compatibility Tool to find information about the pluggable transceivers supported on your Juniper Networks device. The list of supported transceivers for the MX Series is located at https://pathfinder.juniper.net/hct/category/#catKey=100001&modelType;=All&pf;=MX+Series. NOTE: To extend the life of the laser, when a PIC is not being actively used with any valid links, take the PIC offline until you are ready to establish a link to another device. For information about taking a PIC offline, see the **request chassis pic offline** command in the CLI Explorer.
LEDs	One tricolor per port: • Off—Not enabled • Green—Online with no alarms or failures • Yellow—Online with alarms for remote failures • Red—Active with a local alarm; router has detected a failure

Copyright © 2019, Juniper Networks, Inc.

Alarms, errors, and events	• SONET alarms:
	  • Alarm indication signal—line (AIS-L)
	  • Alarm indication signal—path (AIS-P)
	  • Bit error rate—signal degrade (BERR-SD)
	  • Bit error rate—signal fail (BERR-SF)
	  • Bit interleaved parity (BIP) error B1, B2, B3
	  • Far-end bit error: remote error indication—line (REI-L), far-end line coding violations (CV-LFE)
	  • Far-end bit error: remote error indication—path (REI-P), far-end path coding violations (CV-PFE)
	  • Loss of frame (LOF)
	  • Loss of pointer (LOP-P)
	  • Loss of signal (LOS)
	  • Payload label mismatch (PLM-P)
	  • Payload unequipped (unequipped STS at path level) (UNEQ-P)
	  • Remote defect indication—line (RDI-L)
	  • Remote defect indication—path (RDI-P)
	• SDH alarms:
	  • Administrative unit alarm indication signal (AU-AIS)
	  • Bit error rate signal degrade (BERR-SD)
	  • Bit error rate signal fail (BERR-SF)
	  • Bit interleaved parity (BIP) error B1, B2, B3
	  • Higher order path—payload label mismatch (HP-PLM)
	  • Higher order path—loss of pointer (HP-LOP)
	  • Higher order path—remote defect indication (HP-RDI)
	  • Higher order path—unequipped (HP-UNEQ)
	  • Loss of frame (LOF)
	  • Loss of signal (LOS)
	  • Multiplex section—alarm indication signal (MS-AIS)
	  • Multiplex section—remote defect indication (MS-RDI)
	  • Multiplex section—remote error indication (MS-REI)
	• Error detection:
	  • Errored seconds (ES-S, ES-L, ES-P)
	  • Far-end errored seconds (ES-LFE, ES-PFE)
	  • Far-end severely errored seconds (SES-LFE, SES-PFE)
	  • Far-end unavailable seconds (UAS-LFE, UAS-PFE)
	  • Severely errored frames (SEF)
	  • Severely errored framing seconds (SEFS-S)
	  • Severely errored seconds (SES-S, SES-L, SES-P)
	  • Unavailable seconds (UAS-L, UAS-P)

Related Documentation

- MX Series FPC and PIC Overview on page 35
- FPCs Supported by MX240, MX480, and MX960 Routers on page 36
- PICs Supported by MX240, MX480, and MX960 Routers on page 37
- High Availability Features on page 36

SONET/SDH OC48/STM16 Enhanced IQ (IQE) PIC with SFP

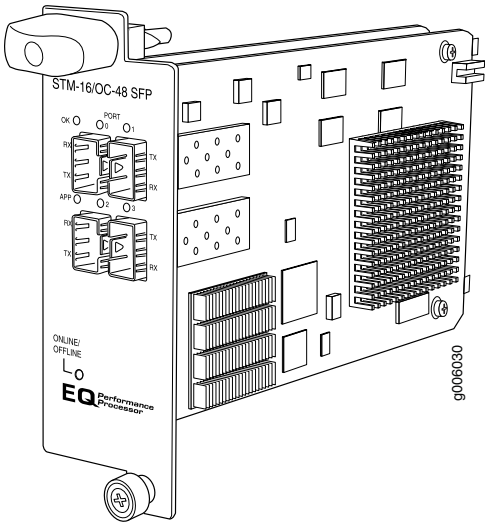

Software release	• Junos OS Release 10.4R2 and later (Type 3)
Description	• Four OC48/STM16 ports • Clear channel functionality • SONET and SDH is configured on a per-port granularity • Power requirement: 1.06 A @ 48 V (51 W) • Weight: 1.6 lb (0.725 kg) • Model number: PC-4OC48-STM16-IQE-SFP

Hardware features	• Ports are numbered:
	  ◦ Top row: 0 and 1 from left to right
	  ◦ Bottom row: 2 and 3 from left to right
	• Maximum transmission units (MTUs) of up to 9192 bytes

Copyright © 2019, Juniper Networks, Inc.

Software features	• Quality of service (QoS) per channel: weighted round-robin (WRR), random early detection (RED), weighted random early detection (WRED)
	• Fine-grained egress queuing per logical interface. See the *Class of Service Feature Guide (Routers and EX9200 Switches)* for more information about class-of-service features
	• Packet buffering
	• Local line and remote payload loopback testing
	• Optical diagnostics and monitoring
	• Clocking options: internal or external/loop mode. Each OC48 transmitter port is configured either in internal or external mode. The default clocking option is internal mode.
	• Encapsulations:
	  • Extended Frame Relay for circuit cross-connect (CCC) and translational cross-connect (TCC)
	  • Flexible Frame Relay
	  • Frame Relay
	  • Frame Relay for CCC
	  • Frame Relay for TCC
	  • Frame Relay port CCC
	  • High-Level Data Link Control (HDLC)
	  • HDLC framing for CCC
	  • HDLC framing for TCC
	  • MPLS CCC
	  • MPLS TCC
	  • Point-to-Point Protocol (PPP)
	  • PPP for CCC
	  • PPP for TCC

Cables and connectors	TIP: You can use the Hardware Compatibility Tool to find information about the pluggable transceivers supported on your Juniper Networks device. The list of supported transceivers for the MX Series is located at https://pathfinder.juniper.net/hct/category/#catKey=100001&modelType;=All&pf;=MX+Series. NOTE: To extend the life of the laser, when a PIC is not being actively used with any valid links, take the PIC offline until you are ready to establish a link to another device. For information about taking a PIC offline, see the **request chassis pic offline** command in the CLI Explorer.

LEDs	OK LED, one tricolor: • Off—PIC is offline and safe to remove from the router • Green—PIC is operating normally • Yellow—PIC is initializing • Red—PIC has an error or failure APP LED, one green per port: • Off—Service is not running • Green—Service is running under acceptable load Port LEDs, one tricolor per port: • Off—Not enabled • Green—Online with no alarms or failures • Yellow—Online with alarms for remote failures • Red—Active with a local alarm; router has detected a failure

Copyright © 2019, Juniper Networks, Inc.

Alarms, errors, and events	SONET alarms: • Loss of light (LOL) • Phase lock loop (PLL) • Loss of frame (LOF) • Loss of signal (LOS) • Severely errored frame (SEF) • Alarm indicator signal—line (AIS-L) • Alarm indicator signal—path (AIS-P) • Loss of pointer (LOP) • Bit error rate—signal degrade (BERR-SD) • Bit error rate—signal fail (BERR-SF) • Remote defect indicator—line (RDI-L) • Remote defect indicator—path (RDI-P) • Remote error indicator (REI) • Unequipped (UNEQ) • Payload label mismatch—path (PLM-P) SDH alarms: • Loss of light (LOL) • Phase lock loop (PLL) • Loss of frame (LOF) • Loss of signal (LOS) • Severely errored frame (SEF) • Multiplex-section alarm indicator signal (MS-AIS) • H Path alarm indicator signal (HP-AIS) • Loss of pointer (LOP) • Bit error rate—signal degrade (BERR-SD) • Bit error rate—signal fail (BERR-SF) • Multiplex section—far end receive failure (MS-FERF) • High order path—far end receive failure (HP-FERF) • Remote error indicator (REI) • Unequipped (UNEQ) • High order path—payload label mismatch - Path (HP-PLM) Optical diagnostics related alarms: NOTE: Transceivers from some vendors do not support these fields. • Temperature high/low alarms and warnings • Supply voltage high/low alarms and warnings • Tx bias current high/low alarms and warnings • Tx output power high/low alarms and warnings • Rx received power high/low alarms and warnings

Related Documentation

- MX Series FPC and PIC Overview on page 35
- FPCs Supported by MX240, MX480, and MX960 Routers on page 36
- PICs Supported by MX240, MX480, and MX960 Routers on page 37

Copyright © 2019, Juniper Networks, Inc.

• High Availability Features on page 36

SONET/SDH OC48/STM16 (Multi-Rate) PIC with SFP

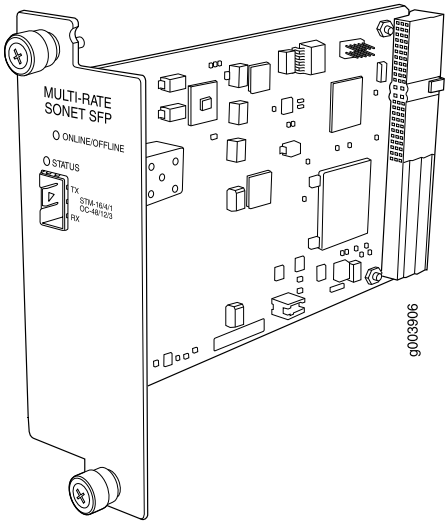

Software release	• Junos 9.5 and later

Description	• Rate-selectable using one of the following rates:
	  • 1-port OC3c/STM1c
	  • 1-port OC12/STM4
	  • 1-port OC12c/STM4c
	  • 1-port OC48/STM16
	  • 1-port OC48c/STM16c
	• Power requirement: 0.20 A @ 48 V (9.5 W)
	• Model Number: PB-1OC48-SON-B-SFP

Hardware features	• Multiplexing and demultiplexing • Rate policing on input • Rate shaping on output • Packet buffering, Layer 2 parsing

 Copyright © 2019, Juniper Networks, Inc.

Software features	• Optical diagnostics and related alarms
	• Per-port SONET/SDH framing
	• Link aggregation
	• Alarm and event counting and detection
	• Dual-router automatic protection switching (APS)
	• Multiprotocol Label Switching (MPLS) fast reroute
	• Encapsulations:
	  ◦ Circuit cross-connect (CCC)
	  ◦ Translational cross-connect (TCC)
	  ◦ Frame Relay
	  ◦ High-Level Data Link Control (HDLC)
	  ◦ Point-to-Point Protocol (PPP)

Cables and connectors	TIP: You can use the Hardware Compatibility Tool to find information about the pluggable transceivers supported on your Juniper Networks device. The list of supported transceivers for the MX Series is located at https://pathfinder.juniper.net/hct/category/#catKey=100001&modelType;=All&pf;=MX+Series. NOTE: To extend the life of the laser, when a PIC is not being actively used with any valid links, take the PIC offline until you are ready to establish a link to another device. For information about taking a PIC offline, see the **request chassis pic offline** command in the CLI Explorer.
LEDs	One tricolor per port: • Off—Not enabled • Green—Online with no alarms or failures • Yellow—Online with alarms for remote failures • Red—Active with a local alarm; router has detected a failure

Alarms, errors, and events	• SONET alarms:
	  • Alarm indication signal—line (AIS-L)
	  • Alarm indication signal—path (AIS-P)
	  • Bit error rate—signal degrade (BERR-SD)
	  • Bit error rate—signal fail (BERR-SF)
	  • Bit interleaved parity (BIP) error B1, B2, B3
	  • Far-end bit error: remote error indication—line (REI-L), far-end line coding violations (CV-LFE)
	  • Far-end bit error: remote error indication—path (REI-P), far-end path coding violations (CV-PFE)
	  • Loss of frame (LOF)
	  • Loss of pointer (LOP-P)
	  • Loss of signal (LOS)
	  • Payload label mismatch (PLM-P)
	  • Payload unequipped (unequipped STS at path level) (UNEQ-P)
	  • Remote defect indication—line (RDI-L)
	  • Remote defect indication—path (RDI-P)
	• SDH alarms:
	  • Administrative unit alarm indication signal (AU-AIS)
	  • Bit error rate signal degrade (BERR-SD)
	  • Bit error rate signal fail (BERR-SF)
	  • Bit interleaved parity (BIP) error B1, B2, B3
	  • Higher order path—payload label mismatch (HP-PLM)
	  • Higher order path—loss of pointer (HP-LOP)
	  • Higher order path—remote defect indication (HP-RDI)
	  • Higher order path—unequipped (HP-UNEQ)
	  • Loss of frame (LOF)
	  • Loss of signal (LOS)
	  • Multiplex section—alarm indication signal (MS-AIS)
	  • Multiplex section—remote defect indication (MS-RDI)
	  • Multiplex section—remote error indication (MS-REI)
	• Error detection:
	  • Errored seconds (ES-S, ES-L, ES-P)
	  • Far-end errored seconds (ES-LFE, ES-PFE)
	  • Far-end severely errored seconds (SES-LFE, SES-PFE)
	  • Far-end unavailable seconds (UAS-LFE, UAS-PFE)
	  • Severely errored frames (SEF)
	  • Severely errored framing seconds (SEFS-S)
	  • Severely errored seconds (SES-S, SES-L, SES-P)
	  • Unavailable seconds (UAS-L, UAS-P)

Related Documentation

- MX Series FPC and PIC Overview on page 35
- FPCs Supported by MX240, MX480, and MX960 Routers on page 36
- PICs Supported by MX240, MX480, and MX960 Routers on page 37
- High Availability Features on page 36

Copyright © 2019, Juniper Networks, Inc.

SONET/SDH OC48/STM16 PIC with SFP

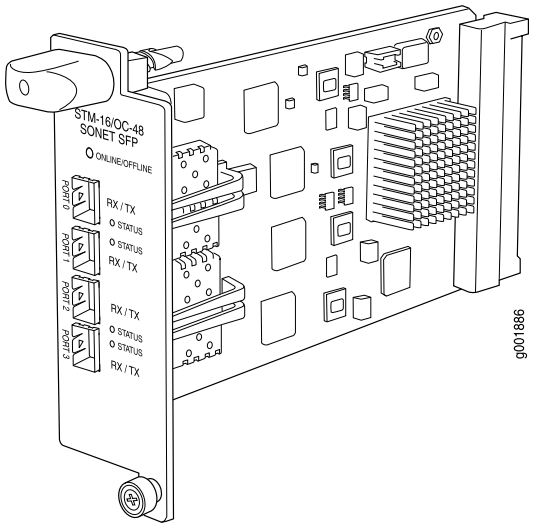

Software release	• Junos 9.4 and later
Description	• Four OC48 ports • Power requirement: 0.86 A @ 48 V (41.4 W) • Model Number: PC-4OC48-SON-SFP
Hardware features	• Rate policing on input • Rate shaping on output • Packet buffering, Layer 2 parsing

Software features	• Optical diagnostics and related alarms
	• Configuration of SONET or SDH framing on a per-port basis
	• SONET/SDH framing
	• Link aggregation
	• Alarm and event counting and detection
	• Dual-router automatic protection switching (APS)
	• Multiprotocol Label Switching (MPLS) fast reroute
	• Encapsulations:
	  ◦ High-Level Data Link Control (HDLC)
	  ◦ Frame Relay
	  ◦ Circuit cross-connect (CCC)
	  ◦ Translational cross-connect (TCC)
	  ◦ Point-to-Point Protocol (PPP)

Copyright © 2019, Juniper Networks, Inc.

Cables and connectors	TIP: You can use the Hardware Compatibility Tool to find information about the pluggable transceivers supported on your Juniper Networks device. The list of supported transceivers for the MX Series is located at https://pathfinder.juniper.net/hct/category/#catKey=100001&modelType;=All&pf;=MX+Series. NOTE: To extend the life of the laser, when a PIC is not being actively used with any valid links, take the PIC offline until you are ready to establish a link to another device. For information about taking a PIC offline, see the **request chassis pic offline** command in the CLI Explorer.
LEDs	One tricolor per port: • Off—Not enabled • Green—Online with no alarms or failures • Yellow—Online with alarms for remote failures • Red—Active with a local alarm; router has detected a failure

Copyright © 2019, Juniper Networks, Inc.

Alarms, errors, and events	• SONET alarms:
	  • Alarm indication signal—line (AIS-L)
	  • Alarm indication signal—path (AIS-P)
	  • Bit error rate—signal degrade (BERR-SD)
	  • Bit error rate—signal fail (BERR-SF)
	  • Bit interleaved parity (BIP) error B1, B2, B3
	  • Far-end bit error: remote error indication—line (REI-L), far-end line coding violations (CV-LFE)
	  • Far-end bit error: remote error indication—path (REI-P), far-end path coding violations (CV-PFE)
	  • Loss of frame (LOF)
	  • Loss of pointer (LOP-P)
	  • Loss of signal (LOS)
	  • Payload label mismatch (PLM-P)
	  • Payload unequipped (unequipped STS at path level) (UNEQ-P)
	  • Remote defect indication—line (RDI-L)
	  • Remote defect indication—path (RDI-P)
	• SDH alarms:
	  • Administrative unit alarm indication signal (AU-AIS)
	  • Bit error rate signal degrade (BERR-SD)
	  • Bit error rate signal fail (BERR-SF)
	  • Bit interleaved parity (BIP) error B1, B2, B3
	  • Higher order path—payload label mismatch (HP-PLM)
	  • Higher order path—loss of pointer (HP-LOP)
	  • Higher order path—remote defect indication (HP-RDI)
	  • Higher order path—unequipped (HP-UNEQ)
	  • Loss of frame (LOF)
	  • Loss of signal (LOS)
	  • Multiplex section—alarm indication signal (MS-AIS)
	  • Multiplex section—remote defect indication (MS-RDI)
	  • Multiplex section—remote error indication (MS-REI)
	• Error detection:
	  • Errored seconds (ES-S, ES-L, ES-P)
	  • Far-end errored seconds (ES-LFE, ES-PFE)
	  • Far-end severely errored seconds (SES-LFE, SES-PFE)
	  • Far-end unavailable seconds (UAS-LFE, UAS-PFE)
	  • Severely errored framing (SEF)
	  • Severely errored framing seconds (SEFS-S)
	  • Severely errored seconds (SES-S, SES-L, SES-P)
	  • Unavailable seconds (UAS-L, UAS-P)

Related Documentation

- MX Series FPC and PIC Overview on page 35
- FPCs Supported by MX240, MX480, and MX960 Routers on page 36
- PICs Supported by MX240, MX480, and MX960 Routers on page 37

- High Availability Features on page 36

SONET/SDH OC192c/STM64 PIC

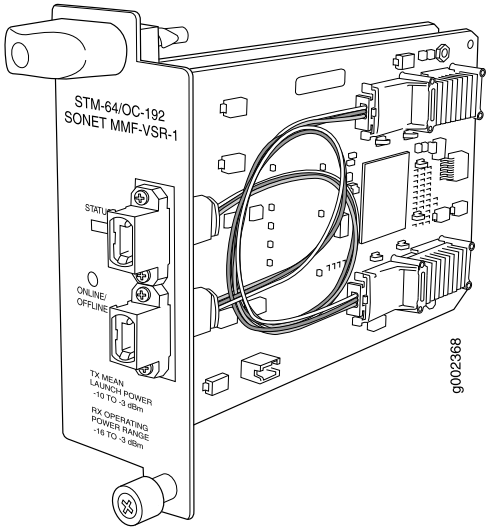

Software release	• Junos 9.4 and later
Description	• One OC192 port • Power requirement: 0.45 A @ 48 V (21.6 W) • Model Number: PC-1OC192-SON-VSR
Hardware features	• Multiplexing and demultiplexing • Rate policing on input • Rate shaping on output • Packet buffering, Layer 2 parsing

Software features	• SONET/SDH framing
	• Link aggregation
	• Alarm and event counting and detection
	• Dual-router automatic protection switching (APS)
	• Multiprotocol Label Switching (MPLS) fast reroute
	• Encapsulations:
	  ◦ High-Level Data Link Control (HDLC)
	  ◦ Frame Relay
	  ◦ Circuit cross-connect (CCC)
	  ◦ Translational cross-connect (TCC)
	  ◦ Point-to-Point Protocol (PPP)

 Copyright © 2019, Juniper Networks, Inc.

Cables and connectors	TIP: You can use the Hardware Compatibility Tool to find information about the pluggable transceivers supported on your Juniper Networks device. The list of supported transceivers for the MX Series is located at https://pathfinder.juniper.net/hct/category/#catKey=100001&modelType;=All&pf;=MX+Series. • Very short reach (VSR 1): 12-ribbon multimode fiber with MTP connector (Rx and Tx) • Fiber-optic 10-gigabit small form-factor pluggable (XFP) transceivers: 10GBASE-S very short reach (VSR-1) (model number: XFP-10G-S) NOTE: To extend the life of the laser, when a PIC is not being actively used with any valid links, take the PIC offline until you are ready to establish a link to another device. For information about taking a PIC offline, see the **request chassis pic offline** command in the CLI Explorer.
LEDs	One tricolor LED per port: • Off—Not enabled • Green—Online with no alarms or failures • Yellow—Online with alarms for remote failures • Red—Active with a local alarm; router has detected a failure

Alarms, errors, and events	• SONET alarms:
	  • Alarm indication signal—line (AIS-L)
	  • Alarm indication signal—path (AIS-P)
	  • Bit error rate—signal degrade (BERR-SD)
	  • Bit error rate—signal fail (BERR-SF)
	  • Bit interleaved parity (BIP) error B1, B2, B3
	  • Far-end bit error: remote error indication—line (REI-L), far-end line coding violations (CV-LFE)
	  • Far-end bit error: remote error indication—path (REI-P), far-end path coding violations (CV-PFE)
	  • Loss of frame (LOF)
	  • Loss of pointer (LOP-P)
	  • Loss of signal (LOS)
	  • Payload label mismatch (PLM-P)
	  • Payload unequipped (unequipped STS at path level) (UNEQ-P)
	  • Remote defect indication—line (RDI-L)
	  • Remote defect indication—path (RDI-P)
	• SDH alarms:
	  • Administrative unit alarm indication signal (AU-AIS)
	  • Bit error rate signal degrade (BERR-SD)
	  • Bit error rate signal fail (BERR-SF)
	  • Bit interleaved parity (BIP) error B1, B2, B3
	  • Higher order path—payload label mismatch (HP-PLM)
	  • Higher order path—loss of pointer (HP-LOP)
	  • Higher order path—remote defect indication (HP-RDI)
	  • Higher order path—unequipped (HP-UNEQ)
	  • Loss of frame (LOF)
	  • Loss of signal (LOS)
	  • Multiplex section—alarm indication signal (MS-AIS)
	  • Multiplex section—remote defect indication (MS-RDI)
	  • Multiplex section—remote error indication (MS-REI)
	• Error detection:
	  • Errored seconds (ES-S, ES-L, ES-P)
	  • Far-end errored seconds (ES-LFE, ES-PFE)
	  • Far-end severely errored seconds (SES-LFE, SES-PFE)
	  • Far-end unavailable seconds (UAS-LFE, UAS-PFE)
	  • Severely errored framing (SEF)
	  • Severely errored framing seconds (SEFS-S)
	  • Severely errored seconds (SES-S, SES-L, SES-P)
	  • Unavailable seconds (UAS-L, UAS-P)

Related Documentation

- MX Series FPC and PIC Overview on page 35
- FPCs Supported by MX240, MX480, and MX960 Routers on page 36
- PICs Supported by MX240, MX480, and MX960 Routers on page 37

Copyright © 2019, Juniper Networks, Inc.

- High Availability Features on page 36

SONET/SDH OC192c/STM64 PIC with XFP

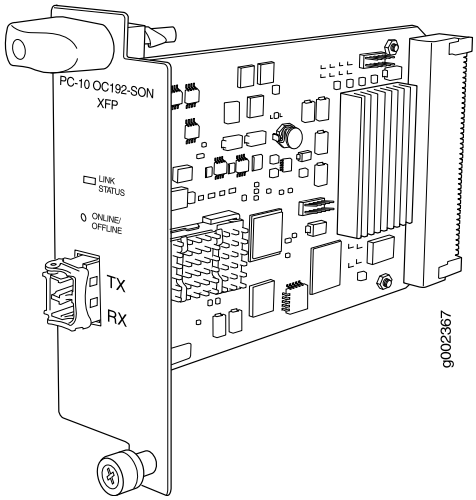

Software release	• Junos 9.4 and later
Description	• One OC192 port • Power requirement: 0.52A @ 48 V (25 W) • Model number: PB-1OC192-SON-XFP
Hardware features	• Multiplexing and demultiplexing • Rate policing on input • Rate shaping on output • Packet buffering, Layer 2 parsing

Software features	• SONET/SDH framing
	• Link aggregation
	• Alarm and event counting and detection
	• Dual-router automatic protection switching (APS)
	• Multiprotocol Label Switching (MPLS) fast reroute
	• Encapsulations:
	  • Circuit cross-connect (CCC)
	  • Translational cross-connect (TCC)
	  • Frame Relay
	  • High-Level Data Link Control (HDLC)
	  • Point-to-Point Protocol (PPP)

Copyright © 2019, Juniper Networks, Inc.

Cables and connectors	TIP: You can use the Hardware Compatibility Tool to find information about the pluggable transceivers supported on your Juniper Networks device. NOTE: To extend the life of the laser, when a PIC is not being actively used with any valid links, take the PIC offline until you are ready to establish a link to another device. For information about taking a PIC offline, see the **request chassis pic offline** command in the CLI Explorer.
LEDs	One tricolor LED per port: • Off—Not enabled • Green—Online with no alarms or failures • Yellow—Online with alarms for remote failures • Red—Active with a local alarm; router has detected a failure

Copyright © 2019, Juniper Networks, Inc.

Alarms, errors, and events	• SONET alarms:
	  • Alarm indication signal—line (AIS-L)
	  • Alarm indication signal—path (AIS-P)
	  • Bit error rate—signal degrade (BERR-SD)
	  • Bit error rate—signal fail (BERR-SF)
	  • Bit interleaved parity (BIP) error B1, B2, B3
	  • Far-end bit error: remote error indication—line (REI-L), far-end line coding violations (CV-LFE)
	  • Far-end bit error: remote error indication—path (REI-P), far-end path coding violations (CV-PFE)
	  • Loss of frame (LOF)
	  • Loss of pointer (LOP-P)
	  • Loss of signal (LOS)
	  • Payload label mismatch (PLM-P)
	  • Payload unequipped (unequipped STS at path level) (UNEQ-P)
	  • Remote defect indication—line (RDI-L)
	  • Remote defect indication—path (RDI-P)
	• SDH alarms:
	  • Administrative unit alarm indication signal (AU-AIS)
	  • Bit error rate signal degrade (BERR-SD)
	  • Bit error rate signal fail (BERR-SF)
	  • Bit interleaved parity (BIP) error B1, B2, B3
	  • Higher order path—payload label mismatch (HP-PLM)
	  • Higher order path—loss of pointer (HP-LOP)
	  • Higher order path—remote defect indication (HP-RDI)
	  • Higher order path—unequipped (HP-UNEQ)
	  • Loss of frame (LOF)
	  • Loss of signal (LOS)
	  • Multiplex section—alarm indication signal (MS-AIS)
	  • Multiplex section—remote defect indication (MS-RDI)
	  • Multiplex section—remote error indication (MS-REI)
	• Error detection:
	  • Errored seconds (ES-S, ES-L, ES-P)
	  • Far-end errored seconds (ES-LFE, ES-PFE)
	  • Far-end severely errored seconds (SES-LFE, SES-PFE)
	  • Far-end unavailable seconds (UAS-LFE, UAS-PFE)
	  • Severely errored framing (SEF)
	  • Severely errored framing seconds (SEFS-S)
	  • Severely errored seconds (SES-S, SES-L, SES-P)
	  • Unavailable seconds (UAS-L, UAS-P)

Related Documentation

- MX Series FPC and PIC Overview on page 35
- FPCs Supported by MX240, MX480, and MX960 Routers on page 36
- PICs Supported by MX240, MX480, and MX960 Routers on page 37

- High Availability Features on page 36

Copyright © 2019, Juniper Networks, Inc.

PART 3

Protocol and Application Support

- DPC Protocol and Application Support for MX240, MX480, and MX960 on page 251
- MPC Protocol and Application Support for MX240, MX480, MX960, MX2010, MX2020, and MX10003 on page 273

Copyright © 2019, Juniper Networks, Inc.

CHAPTER 11

DPC Protocol and Application Support for MX240, MX480, and MX960

- Protocols and Applications Supported by DPCs and Enhanced DPCs (DPC and DPCE-R) on page 251
- Protocols and Applications Supported by Enhanced Ethernet Services DPCs (DPCE-X) on page 257
- Protocols and Applications Supported by Enhanced Queuing IP Services DPCs (DPCE-R-Q) on page 261
- Protocols and Applications Supported by Enhanced Queuing Ethernet Services DPCs (DPCE-X-Q) on page 266
- Protocols and Applications Supported by the Multiservices DPC (MS-DPC) on page 271

Protocols and Applications Supported by DPCs and Enhanced DPCs (DPC and DPCE-R)

Table 29 on page 251 contains the first Junos OS Release support for protocols and applications on the MX240, MX480, and MX960 DPCs and Enhanced DPCs. A dash indicates that the protocol or application is not supported.

Table 29: Protocols and Applications Supported by the DPCs and Enhanced DPCs (DPC and DPCE-R)

Protocol or Application	First Junos OS Release Supported by DPC Model Number (DPC Name)				
	DPC-R-4XGE-XFP DPC-R-40GE-SFP (DPC)	DPCE-R-2XGE-XFP (Enhanced DPC)	DPCE-R-4XGE-XFP DPCE-R-40GE-SFP (Enhanced DPC)	DPCE-R-40GE-TX (Tri-Rate Enhanced DPC)	DPCE-R-20GE-2XGE (Multi-Rate Enhanced DPC)
Access Node Control Protocol (ANCP)	9.4	9.4	9.4	9.4	9.4
Accepts traffic destined for GRE tunnels or DVMRP (IP-in-IP) tunnels	8.2	9.1	8.4	9.1	9.2

Table 29: Protocols and Applications Supported by the DPCs and Enhanced DPCs (DPC and DPCE-R) (continued)

Protocol or Application	First Junos OS Release Supported by DPC Model Number (DPC Name)				
	DPC-R-4XGE-XFP DPC-R-40GE-SFP (DPC)	DPCE-R-2XGE-XFP (Enhanced DPC)	DPCE-R-4XGE-XFP DPCE-R-40GE-SFP (Enhanced DPC)	DPCE-R-40GE-TX (Tri-Rate Enhanced DPC)	DPCE-R-20GE-2XGE (Multi-Rate Enhanced DPC)
Bidirectional Forwarding Detection protocol (BFD)	8.2	9.1	8.4	9.1	9.2
Border Gateway Protocol (BGP)	8.2	9.1	8.4	9.1	9.2
BGP/*Multiprotocol Label Switching (MPLS)* virtual private networks (VPNs)	8.2	9.1	8.4	9.1	9.2
Distance Vector Multicast Routing Protocol (DVMRP) and generic routing encapsulation (GRE) support—access side and server side	8.2	9.1	8.4	9.1	9.2
IEEE 802.1ag Ethernet OAM Continuity Check protocol	8.4	9.1	8.4	9.1	9.2
IEEE 802.1ag Ethernet OAM Linktrace protocol	9.0	9.1	9.0	9.1	9.2
IEEE 802.1ag Ethernet OAM Loopback protocol	9.1	9.1	9.1	9.1	9.2
Firewall filters	8.2	9.1	8.4	9.1	9.2
Flexible Ethernet encapsulation	8.2	9.1	8.4	9.1	9.2
Graceful Routing Engine Switchover (GRES)	8.3	9.1	8.4	9.1	9.2
Ingress hierarchical quality of service (HQoS) shaping and *hierarchical-scheduler*: • Group of virtual LANs (VLANs) level • Virtual LAN (VLAN) level • Port level	–	–	–	–	–

Copyright © 2019, Juniper Networks, Inc.

Table 29: Protocols and Applications Supported by the DPCs and Enhanced DPCs (DPC and DPCE-R) (continued)

Protocol or Application	First Junos OS Release Supported by DPC Model Number (DPC Name)				
	DPC-R-4XGE-XFP DPC-R-40GE-SFP (DPC)	DPCE-R-2XGE-XFP (Enhanced DPC)	DPCE-R-4XGE-XFP DPCE-R-40GE-SFP (Enhanced DPC)	DPCE-R-40GE-TX (Tri-Rate Enhanced DPC)	DPCE-R-20GE-2XGE (Multi-Rate Enhanced DPC)
IPv4	8.2	9.1	8.4	9.1	9.2
IP multicast	8.2	9.1	8.4	9.1	9.2
IPv6	8.2	9.1	8.4	9.1	9.2
IPv6 multicast	8.2	9.1	8.4	9.1	9.2
IPv6 Neighbor Discovery	8.2	9.1	8.4	9.1	9.2
Intermediate System-to-Intermediate System (IS-IS)	8.2	9.1	8.4	9.1	9.2
Layer 2 frame filtering	8.2	9.1	8.4	9.1	9.2
IEEE 802.3ad link aggregation	8.2	9.1	8.4	9.1	9.2
Link Aggregation Control Protocol (LACP)	8.2	9.1	8.4	9.1	9.2
Local loopback	8.2	9.1	8.4	9.1	9.2
MAC learning, policing, accounting, and filtering	8.2	9.1	8.4	9.1	9.2
IEEE 802.1s Multiple Spanning Tree Protocol (MSTP) (part of IEEE 802.1Q VLANs)	8.4	9.1	8.4	9.1	9.2
Multi-chassis link aggregation (MC-AE)	10.0	10.0	10.0	10.0	10.0
Multiple tag protocol identifiers (TPIDs)	8.2	9.1	8.4	9.1	9.2
Multiprotocol Label Switching (MPLS)	8.2	9.1	8.4	9.1	9.2

Copyright © 2019, Juniper Networks, Inc.

Table 29: Protocols and Applications Supported by the DPCs and Enhanced DPCs (DPC and DPCE-R) (continued)

Protocol or Application	First Junos OS Release Supported by DPC Model Number (DPC Name)				
	DPC-R-4XGE-XFP DPC-R-40GE-SFP (DPC)	DPCE-R-2XGE-XFP (Enhanced DPC)	DPCE-R-4XGE-XFP DPCE-R-40GE-SFP (Enhanced DPC)	DPCE-R-40GE-TX (Tri-Rate Enhanced DPC)	DPCE-R-20GE-2XGE (Multi-Rate Enhanced DPC)
mvrp	10.1	10.1	10.1	10.1	10.1
IEEE 802.3ah OAM • Discovery and link monitoring • *Fault signaling and detection* • *Remote loopback*	8.2	9.1	8.4	9.1	9.2
Multitopology Routing (MTR)	9.0	9.1	9.0	9.1	9.2
Open Shortest Path First (OSPF)	8.2	9.1	8.4	9.1	9.2
Packet mirroring	8.2	9.1	8.4	9.1	9.2
IEEE 802.1ah provider backbone bridges (PBB)	10.0	10.0	10.0	10.0	10.0
Quality of service (QoS) per port: • 8 queues per port • Shaping at queue level • Scheduling of queues based on weighted round-robin (WRR) per priority class • Random early detection (RED) • Weighted random early detection (WRED)	8.2	9.1	8.4	9.1	9.2
• Shaping at port level	–	–	–	–	–

Copyright © 2019, Juniper Networks, Inc.

Table 29: Protocols and Applications Supported by the DPCs and Enhanced DPCs (DPC and DPCE-R) (continued)

Protocol or Application	First Junos OS Release Supported by DPC Model Number (DPC Name)				
	DPC-R-4XGE-XFP DPC-R-40GE-SFP (DPC)	DPCE-R-2XGE-XFP (Enhanced DPC)	DPCE-R-4XGE-XFP DPCE-R-40GE-SFP (Enhanced DPC)	DPCE-R-40GE-TX (Tri-Rate Enhanced DPC)	DPCE-R-20GE-2XGE (Multi-Rate Enhanced DPC)
Quality of service (QoS) per virtual LAN (VLAN): • Accounting, filtering, and policing • IEEE 802.1p rewrite • Classification • Tricolor marking	8.2	9.1	8.4	9.1	9.2
Quality of service (QoS) queuing per virtual LAN (VLAN)	–	–	–	–	–
IEEE 802.1w Rapid Spanning Tree Protocol (RSTP)	8.4	9.1	8.4	9.1	9.2
Per-VLAN Spanning Tree (PVST)+	9.0	9.1	9.0	9.1	9.2
RSVP	8.2	9.1	8.4	9.1	9.2
Routing Information Protocol (RIP)	8.2	9.1	8.4	9.1	9.2
SNMP	8.2	9.1	8.4	9.1	9.2
IEEE 802.1D Spanning Tree Protocol (STP)	8.4	9.1	8.4	9.1	9.2
Subscriber Management: NOTE: Starting in Junos OS Release 15.1R4, MS-DPCs are not supported for subscriber management on MX Series routers.	9.2	9.2	9.2	9.2	9.2
• Access Node Control Protocol (ANCP)	9.4	9.4	9.4	9.4	9.4
• Dynamic profiles	9.2	9.2	9.2	9.2	9.2

Table 29: Protocols and Applications Supported by the DPCs and Enhanced DPCs (DPC and DPCE-R) (continued)

Protocol or Application	First Junos OS Release Supported by DPC Model Number (DPC Name)				
	DPC-R-4XGE-XFP DPC-R-40GE-SFP (DPC)	DPCE-R-2XGE-XFP (Enhanced DPC)	DPCE-R-4XGE-XFP DPCE-R-40GE-SFP (Enhanced DPC)	DPCE-R-40GE-TX (Tri-Rate Enhanced DPC)	DPCE-R-20GE-2XGE (Multi-Rate Enhanced DPC)
• Dynamic VLANs	–	9.5	9.5	9.5	9.5
• Enhanced Dynamic Host Configuration Protocol (DHCP) local server	9.3	9.3	9.3	9.3	9.3
• Enhanced DCHP relay	9.3	9.3	9.3	9.3	9.3
• Firewall filters	9.2	9.2	9.2	9.2	9.2
• Internet Group Management Protocol (IGMP)	9.2	9.2	9.2	9.2	9.2
• QoS	9.2	9.2	9.2	9.2	9.2
• Subscriber Secure Policy	9.4	9.4	9.4	9.4	9.4
Two-Way Active Measurement Protocol (TWAMP)	9.5	9.5	9.5	9.5	9.5
IEEE 802.1Q VLANs: • VLAN stacking and rewriting • Channels defined by two stacked VLAN tags • Flexible VLAN tagging • IP service for nonstandard TPID and stacked VLAN tags	8.2	9.1	8.4	9.1	9.2
Virtual private LAN service (VPLS)	8.2	9.1	8.4	9.1	9.2
Virtual private network (VPN)	8.2	9.1	8.4	9.1	9.2
Virtual Router Redundancy Protocol (VRRP) for IPv4	8.2	9.1	8.4	9.1	9.2

Copyright © 2019, Juniper Networks, Inc.

Related Documentation

- DPCs Supported on MX240, MX480, and MX960 Routers on page 8
- Protocols and Applications Supported by Enhanced Ethernet Services DPCs (DPCE-X) on page 257
- Protocols and Applications Supported by Enhanced Queuing IP Services DPCs (DPCE-R-Q) on page 261
- Protocols and Applications Supported by Enhanced Queuing Ethernet Services DPCs (DPCE-X-Q) on page 266
- Protocols and Applications Supported by the Multiservices DPC (MS-DPC) on page 271

Protocols and Applications Supported by Enhanced Ethernet Services DPCs (DPCE-X)

Table 30 on page 257 contains the first Junos OS Release support for protocols and applications on the MX240, MX480, and MX960 Enhanced Ethernet Services DPCs. A dash indicates that the protocol or application is not supported.

Table 30: Protocols and Applications Supported by the Enhanced Ethernet Services DPCs (DPCE-X)

Protocol or Application	First Junos OS Release Supported by DPC Model Number (DPC Name)		
	DPCE-X-4XGE-XFP DPCE-X-40GE-SFP (Enhanced Ethernet Services DPC)	DPCE-X-40GE-TX (Tri-Rate Enhanced Ethernet Services DPC)	DPCE-X-20GE-2XGE (Multi-Rate Enhanced Ethernet Services DPC)
Access Node Control Protocol (ANCP)	9.4	9.4	9.4
Accepts traffic destined for GRE tunnels or DVMRP (IP-in-IP) tunnels	8.4	9.1	9.2
Bidirectional Forwarding Detection protocol (BFD)	8.4	9.1	9.2
Border Gateway Protocol (BGP)	8.4	9.1	9.2
BGP/Multiprotocol Label Switching (MPLS) virtual private networks (VPNs)	8.4	9.1	9.2
Distance Vector Multicast Routing Protocol (DVMRP) and generic routing encapsulation (GRE) support—access side and server side	8.4	9.1	9.2
IEEE 802.1ag Ethernet OAM Continuity Check protocol	8.4	9.1	9.2
IEEE 802.1ag Ethernet OAM Linktrace protocol	9.0	9.1	9.2

Copyright © 2019, Juniper Networks, Inc.

Table 30: Protocols and Applications Supported by the Enhanced Ethernet Services DPCs (DPCE-X) (continued)

Protocol or Application	First Junos OS Release Supported by DPC Model Number (DPC Name)		
	DPCE-X-4XGE-XFP DPCE-X-40GE-SFP (Enhanced Ethernet Services DPC)	DPCE-X-40GE-TX (Tri-Rate Enhanced Ethernet Services DPC)	DPCE-X-20GE-2XGE (Multi-Rate Enhanced Ethernet Services DPC)
IEEE 802.1ag Ethernet OAM Loopback protocol	9.1	9.1	9.2
Firewall filters	8.4 (Limited filter terms)	9.1 (Limited filter terms)	9.2 (Limited filter terms)
Flexible Ethernet encapsulation	8.4	9.1	9.2
Graceful Routing Engine Switchover (GRES)	8.4	9.1	9.2
Ingress hierarchical quality of service (HQoS) shaping and scheduling: • Group of virtual LANs (VLANs) level • Virtual LAN (VLAN) level • Port level	–	–	–
Intermediate System-to-Intermediate System (IS-IS)	8.4	9.1	9.2
IPv4 (No BGP)	8.4	9.1	9.2)
IP multicast (No BGP)	8.4	9.1	9.2
IPv6 (No BGP)	8.4	9.1	9.2)
IPv6 multicast (No BGP)	8.4	9.1	9.2)
IPv6 Neighbor Discovery (No BGP)	8.4	9.1)	9.2)
Layer 2 frame filtering	8.4	9.1	9.2
IEEE 802.3ad link aggregation	8.4	9.1	9.2
Link Aggregation Control Protocol (LACP)	8.4	9.1	9.2
Local loopback	8.4	9.1	9.2
MAC learning, policing, accounting, and filtering	8.4	9.1	9.2

Copyright © 2019, Juniper Networks, Inc.

Table 30: Protocols and Applications Supported by the Enhanced Ethernet Services DPCs (DPCE-X) (continued)

Protocol or Application	First Junos OS Release Supported by DPC Model Number (DPC Name)		
	DPCE-X-4XGE-XFP DPCE-X-40GE-SFP (Enhanced Ethernet Services DPC)	DPCE-X-40GE-TX (Tri-Rate Enhanced Ethernet Services DPC)	DPCE-X-20GE-2XGE (Multi-Rate Enhanced Ethernet Services DPC)
IEEE 802.1s Multiple Spanning Tree Protocol (MSTP) (part of IEEE 802.1Q VLANs)	8.4	9.1	9.2
Multiple tag protocol identifiers (TPIDs)	8.4	9.1	9.2
Multiprotocol Label Switching (MPLS)	8.4	9.1	9.2
IEEE 802.3ah OAM • Discovery and link monitoring • Fault signaling and detection • Remote loopback	8.4	9.1	9.2
Multitopology Routing (MTR)	9.0	9.1	9.2
Open Shortest Path First (OSPF)	8.4	9.1	9.2
Packet mirroring	8.4	9.1	9.2
Quality of service (QoS) per port: • 8 queues per port • Shaping at queue level • Scheduling of queues based on weighted round-robin (WRR) per priority class • Random early detection (RED) • Weighted random early detection (WRED)	8.4	9.1	9.2
Quality of service (QoS) per virtual LAN (VLAN): • Accounting, filtering, and policing • IEEE 802.1p rewrite • Classification • Tricolor marking	8.4	9.1	9.2
Quality of service (QoS) queuing per virtual LAN (VLAN)	–	–	–

Table 30: Protocols and Applications Supported by the Enhanced Ethernet Services DPCs (DPCE-X) (continued)

Protocol or Application	First Junos OS Release Supported by DPC Model Number (DPC Name)		
	DPCE-X-4XGE-XFP DPCE-X-40GE-SFP (Enhanced Ethernet Services DPC)	DPCE-X-40GE-TX (Tri-Rate Enhanced Ethernet Services DPC)	DPCE-X-20GE-2XGE (Multi-Rate Enhanced Ethernet Services DPC)
IEEE 802.1w Rapid Spanning Tree Protocol (RSTP)	8.4	9.1	9.2
Per-VLAN Spanning Tree (PVST)+	9.0	9.1	9.2
RSVP	8.4	9.1	9.2
Routing Information Protocol (RIP)	8.4	9.1	9.2
SNMP	8.4	9.1	9.2
IEEE 802.1D Spanning Tree Protocol (STP)	8.4	9.1	9.2
Subscriber Management: Starting in Junos OS Release 15.1R4, MS-DPCs are not supported for subscriber management on MX Series routers.	9.4	9.4	9.4
• Access Node Control Protocol (ANCP)	9.4	9.4	9.4
• Dynamic profiles	9.2	9.2	9.2
• Dynamic VLANs	9.5	9.5	9.5
• Enhanced Dynamic Host Configuration Protocol (DHCP) local server	9.3	9.3	9.3
• Enhanced DCHP relay	9.3	9.3	9.3
• Firewall filters	9.2	9.2	9.2
• Internet Group Management Protocol (IGMP)	9.2	9.2	9.2
• QoS	9.2	9.2	9.2
• Subscriber Secure Policy	9.4	9.4	9.4
Two-Way Active Measurement Protocol (TWAMP)	9.5	9.5	9.5

Copyright © 2019, Juniper Networks, Inc.

Table 30: Protocols and Applications Supported by the Enhanced Ethernet Services DPCs (DPCE-X) (continued)

Protocol or Application	First Junos OS Release Supported by DPC Model Number (DPC Name)		
	DPCE-X-4XGE-XFP DPCE-X-40GE-SFP (Enhanced Ethernet Services DPC)	DPCE-X-40GE-TX (Tri-Rate Enhanced Ethernet Services DPC)	DPCE-X-20GE-2XGE (Multi-Rate Enhanced Ethernet Services DPC)
IEEE 802.1Q VLANs: • VLAN stacking and rewriting • Channels defined by two stacked VLAN tags • Flexible VLAN tagging • IP service for nonstandard TPID and stacked VLAN tags	8.4	9.1	9.2
Virtual private LAN service (VPLS)	8.4	9.1	9.2
Virtual private network (VPN) (L2 VPN only)	8.4	9.1	9.2
Virtual Router Redundancy Protocol (VRRP) for IPv4	8.4	9.1	9.2

Related Documentation

- DPCs Supported on MX240, MX480, and MX960 Routers on page 8
- Protocols and Applications Supported by DPCs and Enhanced DPCs (DPC and DPCE-R) on page 251
- Protocols and Applications Supported by Enhanced Queuing IP Services DPCs (DPCE-R-Q) on page 261
- Protocols and Applications Supported by Enhanced Queuing Ethernet Services DPCs (DPCE-X-Q) on page 266
- Protocols and Applications Supported by the Multiservices DPC (MS-DPC) on page 271

Protocols and Applications Supported by Enhanced Queuing IP Services DPCs (DPCE-R-Q)

Table 31 on page 262 contains the first Junos OS Release support for protocols and applications on the MX240, MX480, and MX960 Enhanced Queuing IP Services DPCs. A dash indicates that the protocol or application is not supported.

Table 31: Protocols and Applications Supported by the Enhanced Queuing IP Services DPCs (DPCE-R-Q)

Protocol or Application	First Junos OS Release Supported by DPC Model Number (DPC Name)		
	DPCE-R-Q-4XGE-XFP DPCE-R-Q-40GE-SFP Enhanced Queuing IP Services DPC	DPCE-R-Q-20GE-SFP Enhanced Queuing IP Services DPC	DPCE-R-Q-20GE-2XGE Enhanced Queuing IP Services Multi-Rate DPC
Access Node Control Protocol (ANCP)	9.4	9.4	9.4
Accepts traffic destined for GRE tunnels or DVMRP (IP-in-IP) tunnels	8.5	9.1	9.3
Bidirectional Forwarding Detection protocol (BFD)	8.5	9.1	9.3
Border Gateway Protocol (BGP)	8.5	9.1	9.3
BGP/Multiprotocol Label Switching (MPLS) virtual private networks (VPNs)	8.5	9.1	9.3
Distance Vector Multicast Routing Protocol (DVMRP) and generic routing encapsulation (GRE) support—access side and server side	8.5	9.1	9.3
IEEE 802.1ag Ethernet OAM Continuity Check protocol	8.5	9.1	9.3
IEEE 802.1ag Ethernet OAM Linktrace protocol	9.0	9.1	9.3
IEEE 802.1ag Ethernet OAM Loopback protocol	9.1	9.1	9.3
Firewall filters	8.5	9.1	9.3
Flexible Ethernet encapsulation	8.5	9.1	9.3
Graceful Routing Engine Switchover (GRES)	8.5	9.1	9.3
Ingress hierarchical quality of service (HQoS) shaping and scheduling: • Group of virtual LANs (VLANs) level • Virtual LAN (VLAN) level • Port level	9.0	9.1	9.3
Intermediate System-to-Intermediate System (IS-IS)	8.5	9.1	9.3
IPv4	8.5	9.1	9.3

Copyright © 2019, Juniper Networks, Inc.

Table 31: Protocols and Applications Supported by the Enhanced Queuing IP Services DPCs (DPCE-R-Q) (continued)

Protocol or Application	First Junos OS Release Supported by DPC Model Number (DPC Name)		
	DPCE-R-Q-4XGE-XFP DPCE-R-Q-40GE-SFP Enhanced Queuing IP Services DPC	DPCE-R-Q-20GE-SFP Enhanced Queuing IP Services DPC	DPCE-R-Q-20GE-2XGE Enhanced Queuing IP Services Multi-Rate DPC
IP multicast	8.5	9.1	9.3
IPv6	8.5	9.1	9.3
IPv6 multicast	8.5	9.1	9.3
IPv6 Neighbor Discovery	8.5	9.1	9.3
Layer 2 frame filtering	8.5	9.1	9.3
IEEE 802.3ad link aggregation	8.5	9.1	9.3
Link Aggregation Control Protocol (LACP)	8.5	9.1	9.3
Local loopback	8.5	9.1	9.3
MAC learning, policing, accounting, and filtering	8.5	9.1	9.3
IEEE 802.1s Multiple Spanning Tree Protocol (MSTP) (part of IEEE 802.1Q VLANs)	8.5	9.1	9.3
Multiple tag protocol identifiers (TPIDs)	8.5	9.1	9.3
Multiprotocol Label Switching (MPLS)	8.5	9.1	9.3
IEEE 802.3ah OAM • Discovery and link monitoring • Fault signaling and detection • Remote loopback	8.5	9.1	9.3
Multitopology Routing (MTR)	9.0	9.1	9.3
Open Shortest Path First (OSPF)	8.5	9.1	9.3
Packet mirroring	8.5	9.1	9.3

Table 31: Protocols and Applications Supported by the Enhanced Queuing IP Services DPCs (DPCE-R-Q) (continued)

Protocol or Application	First Junos OS Release Supported by DPC Model Number (DPC Name)		
	DPCE-R-Q-4XGE-XFP DPCE-R-Q-40GE-SFP Enhanced Queuing IP Services DPC	DPCE-R-Q-20GE-SFP Enhanced Queuing IP Services DPC	DPCE-R-Q-20GE-2XGE Enhanced Queuing IP Services Multi-Rate DPC
Quality of service (QoS) per port: • 8 queues per port • Shaping at port level • Scheduling of queues based on weighted round-robin (WRR) per priority class • Random early detection (RED) • Weighted random early detection (WRED)	8.5	9.1	9.3
Quality of service (QoS) per virtual LAN (VLAN): • Accounting, filtering, and policing • IEEE 802.1p rewrite • Classification • Tricolor marking • Shaping at queue and port level • Scheduling of queues based on weighted round-robin (WRR) per priority class • Random early detection (RED) • Weighted random early detection (WRED)	8.5	9.1	9.3
Quality of service (QoS) queuing per virtual LAN (VLAN)	8.5	9.1	9.3
IEEE 802.1w Rapid Spanning Tree Protocol (RSTP)	8.5	9.1	9.3
Per-VLAN Spanning Tree (PVST)+	9.0	9.1	9.3
RSVP	8.5	9.1	9.3
Routing Information Protocol (RIP)	8.5	9.1	9.3
SNMP	8.5	9.1	9.3
IEEE 802.1D Spanning Tree Protocol (STP)	8.5	9.1	9.3

Copyright © 2019, Juniper Networks, Inc.

Table 31: Protocols and Applications Supported by the Enhanced Queuing IP Services DPCs (DPCE-R-Q) (continued)

Protocol or Application	First Junos OS Release Supported by DPC Model Number (DPC Name)		
	DPCE-R-Q-4XGE-XFP DPCE-R-Q-40GE-SFP Enhanced Queuing IP Services DPC	DPCE-R-Q-20GE-SFP Enhanced Queuing IP Services DPC	DPCE-R-Q-20GE-2XGE Enhanced Queuing IP Services Multi-Rate DPC
Subscriber Management: NOTE: Starting in Junos OS Release 15.1R4, MS-DPCs are not supported for subscriber management on MX Series routers.	9.4	9.4	9.4
• Access Node Control Protocol (ANCP)	9.4	9.4	9.4
• Dynamic profiles	9.2	9.2	9.2
• Dynamic VLANs	9.5	9.5	9.5
• Enhanced Dynamic Host Configuration Protocol (DHCP) local server	9.3	9.3	9.3
• Enhanced DCHP relay	9.3	9.3	9.3
• Firewall filters	9.2	9.2	9.2
• Internet Group Management Protocol (IGMP)	9.2	9.2	9.2
• QoS	9.2	9.2	9.2
• Subscriber Secure Policy	9.4	9.4	9.4
• VLAN demux	–	–	–
Two-Way Active Measurement Protocol (TWAMP)	9.5	9.5	9.5
IEEE 802.1Q VLANs: • VLAN stacking and rewriting • Channels defined by two stacked VLAN tags • Flexible VLAN tagging • IP service for nonstandard TPID and stacked VLAN tags	8.5	9.1	9.3
Virtual private LAN service (VPLS)	8.5	9.1	9.3
Virtual private network (VPN)	8.5	9.1	9.3

Table 31: Protocols and Applications Supported by the Enhanced Queuing IP Services DPCs (DPCE-R-Q) (continued)

Protocol or Application	First Junos OS Release Supported by DPC Model Number (DPC Name)		
	DPCE-R-Q-4XGE-XFP DPCE-R-Q-40GE-SFP Enhanced Queuing IP Services DPC	DPCE-R-Q-20GE-SFP Enhanced Queuing IP Services DPC	DPCE-R-Q-20GE-2XGE Enhanced Queuing IP Services Multi-Rate DPC
Virtual Router Redundancy Protocol (VRRP) for IPv4	8.5	9.1	9.3

Related Documentation

- DPCs Supported on MX240, MX480, and MX960 Routers on page 8
- Protocols and Applications Supported by DPCs and Enhanced DPCs (DPC and DPCE-R) on page 251
- Protocols and Applications Supported by Enhanced Ethernet Services DPCs (DPCE-X) on page 257
- Protocols and Applications Supported by Enhanced Queuing Ethernet Services DPCs (DPCE-X-Q) on page 266
- Protocols and Applications Supported by the Multiservices DPC (MS-DPC) on page 271

Protocols and Applications Supported by Enhanced Queuing Ethernet Services DPCs (DPCE-X-Q)

Table 32 on page 266 contains the first Junos OS Release support for protocols and applications on the MX240, MX480, and MX960 Enhanced Queuing Ethernet Services DPCs. A dash indicates that the protocol or application is not supported.

Table 32: Protocols and Applications Supported by the Enhanced Queuing Ethernet Services DPCs (DPCE-X-Q)

Protocol or Application	DPCE-X-Q-4XGE-XFP DPCE-X-Q-40GE-SFP (Enhanced Queuing Ethernet Services DPC)
Access Node Control Protocol (ANCP)	9.4
Accepts traffic destined for GRE tunnels or DVMRP (IP-in-IP) tunnels	8.5
Bidirectional Forwarding Detection protocol (BFD)	8.5
Border Gateway Protocol (BGP)	8.5

Copyright © 2019, Juniper Networks, Inc.

Table 32: Protocols and Applications Supported by the Enhanced Queuing Ethernet Services DPCs (DPCE-X-Q) (continued)

Protocol or Application	DPCE-X-Q-4XGE-XFP DPCE-X-Q-40GE-SFP (Enhanced Queuing Ethernet Services DPC)
BGP/Multiprotocol Label Switching (MPLS) virtual private networks (VPNs)	8.5
Distance Vector Multicast Routing Protocol (DVMRP) and generic routing encapsulation (GRE) support—access side and server side	8.5
IEEE 802.1ag Ethernet OAM Continuity Check protocol	8.5
IEEE 802.1ag Ethernet OAM Linktrace protocol	9.0
IEEE 802.1ag Ethernet OAM Loopback protocol	9.1
Firewall filters	8.5 (Limited filter terms)
Flexible Ethernet encapsulation	8.5
Graceful Routing Engine Switchover (GRES)	8.5
Ingress hierarchical quality of service (HQoS) shaping and scheduling: • Group of virtual LANs (VLANs) level • Virtual LAN (VLAN) level • Port level	9.0
Intermediate System-to-Intermediate System (IS-IS)	8.5
IPv4 (No BGP)	8.5
IP multicast (No BGP)	8.5
IPv6 (No BGP)	8.5
IPv6 multicast (No BGP)	8.5
IPv6 Neighbor Discovery (No BGP)	8.5
Layer 2 frame filtering	8.5
IEEE 802.3ad link aggregation	8.5

Table 32: Protocols and Applications Supported by the Enhanced Queuing Ethernet Services DPCs (DPCE-X-Q) (continued)

Protocol or Application	DPCE-X-Q-4XGE-XFP DPCE-X-Q-40GE-SFP (Enhanced Queuing Ethernet Services DPC)
Link Aggregation Control Protocol (LACP)	8.5
Local loopback	8.5
MAC learning, policing, accounting, and filtering	8.5
IEEE 802.1s Multiple Spanning Tree Protocol (MSTP) (part of IEEE 802.1Q VLANs)	8.5
Multiple tag protocol identifiers (TPIDs)	8.5
Multiprotocol Label Switching (MPLS)	8.5
IEEE 802.3ah OAM • Discovery and link monitoring • Fault signaling and detection • Remote loopback	8.5
Multitopology Routing (MTR)	9.0
Open Shortest Path First (OSPF)	8.5
Packet mirroring	8.5
Quality of service (QoS) per port: • 8 queues per port • Shaping at port level • Scheduling of queues based on weighted round-robin (WRR) per priority class • Random early detection (RED) • Weighted random early detection (WRED)	8.5
Shaping at queue level	–

Copyright © 2019, Juniper Networks, Inc.

Table 32: Protocols and Applications Supported by the Enhanced Queuing Ethernet Services DPCs (DPCE-X-Q) (continued)

Protocol or Application	DPCE-X-Q-4XGE-XFP DPCE-X-Q-40GE-SFP (Enhanced Queuing Ethernet Services DPC)
Quality of service (QoS) per virtual LAN (VLAN): • Accounting, filtering, and policing • IEEE 802.1p rewrite • Classification • Tricolor marking • Shaping at port level • Scheduling of queues based on weighted round-robin (WRR) per priority class • Random early detection (RED) • Weighted random early detection (WRED)	8.5
Shaping at queue level	–
Quality of service (QoS) queuing per virtual LAN (VLAN)	8.5
IEEE 802.1w Rapid Spanning Tree Protocol (RSTP)	8.5
Per-VLAN Spanning Tree (PVST)+	9.0
Remote loopback	8.5
RSVP	8.5
Routing Information Protocol (RIP)	8.5
SNMP	8.5
IEEE 802.1D Spanning Tree Protocol (STP)	8.5
Subscriber Management: Starting in Junos OS Release 15.1R4, MS-DPCs are not supported for subscriber management on MX Series routers.	9.4
• Access Node Control Protocol (ANCP)	9.4
• Dynamic profiles	9.2
• Dynamic VLANs	9.5

Table 32: Protocols and Applications Supported by the Enhanced Queuing Ethernet Services DPCs (DPCE-X-Q) (continued)

Protocol or Application	DPCE-X-Q-4XGE-XFP DPCE-X-Q-40GE-SFP (Enhanced Queuing Ethernet Services DPC)
• Enhanced Dynamic Host Configuration Protocol (DHCP) local server	9.3
• Enhanced DCHP relay	9.3
• Firewall filters	9.2
• Internet Group Management Protocol (IGMP)	9.2
• QoS	9.2
• Subscriber Secure Policy	9.4
• VLAN demux	–
Two-Way Active Measurement Protocol (TWAMP)	9.5
IEEE 802.1Q VLANs: • VLAN stacking and rewriting • Channels defined by two stacked VLAN tags • Flexible VLAN tagging • IP service for nonstandard TPID and stacked VLAN tags	8.5
Virtual private LAN service (VPLS)	8.5
Virtual private network (VPN)	8.5 (L2 VPN only)
Virtual Router Redundancy Protocol (VRRP) for IPv4	8.5

Related Documentation

- DPCs Supported on MX240, MX480, and MX960 Routers on page 8
- Protocols and Applications Supported by DPCs and Enhanced DPCs (DPC and DPCE-R) on page 251
- Protocols and Applications Supported by Enhanced Ethernet Services DPCs (DPCE-X) on page 257
- Protocols and Applications Supported by Enhanced Queuing IP Services DPCs (DPCE-R-Q) on page 261
- Protocols and Applications Supported by the Multiservices DPC (MS-DPC) on page 271

Copyright © 2019, Juniper Networks, Inc.

Protocols and Applications Supported by the Multiservices DPC (MS-DPC)

Table 33 on page 271 contains the first Junos OS Release support for protocols and applications on the MX240, MX480, and MX960 Multiservices DPCs. A dash indicates that the protocol or application is not supported.

NOTE: The maximum number of supported MS-DPCs is as follows except where noted in Table 33 on page 271:

- MX240 router: 2
- MX480 router: 4
- MX960 router: 8

Table 33: Protocols and Applications Supported by the Multiservices DPC (MS-DPC)

Protocol or Application	MS-DPC
Accepts traffic destined for GRE tunnels	9.3
Active flow monitoring exports cflowd version 5 and version 8 records	9.3
Active flow monitoring exports flow monitoring version 9 records, based on RFC 3954	9.3
Graceful Routing Engine Switchover (GRES)	9.4
GRE dont fragment	9.3
GRE Key	9.3
GRE reassembly	9.3
IP Security (IPSec) encryption	9.3
Network Address Translation (NAT) for IP addresses NOTE: The MX960 supports 8 MS-DPCs using this feature.	9.3
NAPT - Preserve parity	15.1
NAPT - Preserve range	15.1
No translation	15.1
Twice NAT	15.1

Copyright © 2019, Juniper Networks, Inc.

Table 33: Protocols and Applications Supported by the Multiservices DPC (MS-DPC) (continued)

Protocol or Application	MS-DPC
Packet-triggered dynamic subscribers and policy control (PTSP) NOTE: Starting in Junos OS Release 13.1R1, the packet-triggered subscribers and policy control (PTSP) feature is no longer supported.	10.2
Port Address Translation (PAT) for port numbers	9.3
Real-time Performance Monitoring (RPM)	9.3
Stateful firewall with packet inspection: detects SYN attacks, ICMP and UDP floods, and ping-of-death attacks NOTE: The MX960 supports 8 MS-DPCs using this feature.	9.3
Tunnel services:	
• GRE unicast tunneling-Supports GRE fragmentation	9.3
• IP-IP unicast tunneling	9.4
• Multicast tunneling	9.4
• Protocol Independent Multicast (PIM) sparse mode unicast tunneling	9.4
• Virtual loopback tunneling (VT)	9.4
Voice over IP (VoIP) services: • Border Gateway Function (BGF) using external H.248/Ia control • Integrated Multi-Service Gateway (IMSG)—Session Border Controller	10.2

Related Documentation

- DPCs Supported on MX240, MX480, and MX960 Routers on page 8
- Protocols and Applications Supported by DPCs and Enhanced DPCs (DPC and DPCE-R) on page 251
- Protocols and Applications Supported by Enhanced Ethernet Services DPCs (DPCE-X) on page 257
- Protocols and Applications Supported by Enhanced Queuing IP Services DPCs (DPCE-R-Q) on page 261
- Protocols and Applications Supported by Enhanced Queuing Ethernet Services DPCs (DPCE-X-Q) on page 266

Copyright © 2019, Juniper Networks, Inc.

CHAPTER 12

MPC Protocol and Application Support for MX240, MX480, MX960, MX2010, MX2020, and MX10003

- Protocols and Applications Supported on MPCs for MX Series Routers on page 273
- Protocols and Applications Supported on the MPC1E for MX Series Routers on page 282
- Protocols and Applications Supported by the MX240, MX480, MX960, MX2010, and MX2020 MPC2E on page 288
- Protocols and Applications Supported by the MPC3E on MX Series Routers on page 296
- Protocols and Applications Supported on the MPC4E for MX Series Routers on page 303
- Protocols and Applications Supported by the MPC5E for MX Series Routers on page 311
- Protocols and Applications Supported by the MPC6E for MX2000 Routers on page 317
- Protocols and Applications Supported by the MPC7E for MX Series Routers on page 324
- Protocols and Applications Supported by the MPC8E and MPC9E on the MX2010 and MX2020 Routers on page 333
- Protocols and Applications Supported by the MS-MIC and MS-MPC on page 340
- Protocols and Applications Supported by the MX10003 MPC (Multi-Rate) on the MX10003 Router on page 342
- Protocols and Applications Supported by the JNP10K-LC2101 on the MX10008 Routers on page 348
- Protocols and Applications Supported by the MPC10E on page 356

Protocols and Applications Supported on MPCs for MX Series Routers

Table 34 on page 274 contains the first Junos OS Release support for protocols and applications on the MX240, MX480, MX960, MX2010, and MX2020 MPCs.

NOTE: The MX2010 router supports protocols and applications in Junos OS 12.3R3 and later. Features added after the Junos OS 12.3R3 release are supported on the MX2010 router in the release indicated.

NOTE: The MX2020 router supports protocols and applications in Junos OS 12.3R2 and later. Features added after the Junos OS 12.3R2 release are supported on the MX2020 router in the release indicated.

A dash indicates that the protocol or application is not supported.

Table 34: Protocols and Applications Supported by the MX240, MX480, MX960, MX2010, and MX2020 MPCs

Protocol or Application	First Junos OS Release Supported by MPC Model Number (MPC Name)					
	MPC-3D-16XGE-SFPP (16x10GE MPC)	MX-MPC1-3D (MPC1)	MX-MPC2-3D (MPC2)	MX-MPC1-3D-Q (MPC1 Q)	MX-MPC2-3D-Q (MPC2 Q)	MX-MPC2-3D-EQ (MPC2 EQ)
Access Node Control Protocol (ANCP)	–	10.2	10.2	10.2	10.2	10.2
Accepts traffic destined for GRE tunnels or DVMRP (IP-in-IP) tunnels	10.0R2	10.2	10.1	10.2	10.1	10.1
Active-active bridging in multichassis link aggregation	13.1	13.1	13.1	13.1	13.1	13.1
Bidirectional Forwarding Detection protocol (BFD)	10.0R2	10.2	10.1	10.2	10.1	10.1
Border Gateway Protocol (BGP)	10.0R2	10.2	10.1	10.2	10.1	10.1
BGP/Multiprotocol Label Switching (MPLS) virtual private networks (VPNs)	10.0R2	10.2	10.1	10.2	10.1	10.1
Distance Vector Multicast Routing Protocol (DVMRP) and generic routing encapsulation (GRE) support—access side and server side	10.0R2	10.2	10.1	10.2	10.1	10.1
Distributed denial-of-service (DDoS) protection	11.2	11.2	11.2	11.2		11.2
IEEE 802.1ag Ethernet OAM Continuity Check protocol	10.2 (bridge family supported in 10.4)	10.2 (bridge family supported in 10.4)	10.2 (bridge family supported in 10.4)	10.2 (bridge family supported in 10.4)	10.2 (bridge family supported in 10.4)	10.2 (bridge family supported in 10.4)

Copyright © 2019, Juniper Networks, Inc.

Table 34: Protocols and Applications Supported by the MX240, MX480, MX960, MX2010, and MX2020 MPCs (continued)

Protocol or Application	First Junos OS Release Supported by MPC Model Number (MPC Name)					
	MPC-3D-16XGE-SFPP (16x10GE MPC)	MX-MPC1-3D (MPC1)	MX-MPC2-3D (MPC2)	MX-MPC1-3D-Q (MPC1 Q)	MX-MPC2-3D-Q (MPC2 Q)	MX-MPC2-3D-EQ (MPC2 EQ)
IEEE 802.1ag Ethernet OAM Linktrace protocol	10.2 (bridge family supported in 10.4)	10.2 (bridge family supported in 10.4)	10.2 (bridge family supported in 10.4)	10.2 (bridge family supported in 10.4)	10.2 (bridge family supported in 10.4)	10.2 (bridge family supported in 10.4)
IEEE 802.1ag Ethernet OAM Loopback protocol	10.2 (bridge family supported in 10.4)	10.2 (bridge family supported in 10.4)	10.2 (bridge family supported in 10.4)	10.2 (bridge family supported in 10.4)	10.2 (bridge family supported in 10.4)	10.2 (bridge family supported in 10.4)
Firewall filters	10.0R2	10.2	10.1	10.2	10.1	10.1
Flexible Ethernet encapsulation	10.0R2	10.2	10.1	10.2	10.1	10.1
Graceful Routing Engine Switchover (GRES)	10.0R2	10.2	10.1	10.2	10.1	10.1
Ingress Differentiated Services code point (DSCP) rewrite	10.0R2	10.2	10.1	10.2	10.1	10.1
Ingress hierarchical quality-of-service (HQoS) shaping and scheduling: • Group of virtual LANs (VLANs) level • Virtual LAN (VLAN) level • Port level	12.1R3	12.1R3	12.1R3	12.1R3	12.1R3	12.1R3
Intelligent oversubscription	10.0R2	10.2	10.1	10.2	10.1	10.1
Integrated routing and bridging (IRB)	10.1	10.2	10.1	10.2	10.1	10.1
Intermediate System-to-Intermediate System (IS-IS)	10.0R2	10.2	10.1	10.2	10.1	10.1
Internet Group Management Protocol (IGMP) (excluding snooping)	10.0R2	10.2	10.1	10.2	10.1	10.1

Copyright © 2019, Juniper Networks, Inc.

Table 34: Protocols and Applications Supported by the MX240, MX480, MX960, MX2010, and MX2020 MPCs (continued)

Protocol or Application	First Junos OS Release Supported by MPC Model Number (MPC Name)					
	MPC-3D-16XGE-SFPP (16x10GE MPC)	MX-MPC1-3D (MPC1)	MX-MPC2-3D (MPC2)	MX-MPC1-3D-Q (MPC1 Q)	MX-MPC2-3D-Q (MPC2 Q)	MX-MPC2-3D-EQ (MPC2 EQ)
Internet Group Management Protocol (IGMP) snooping	11.4	11.4	11.4	11.4	11.4	11.4
IPv4	10.0R2	10.2	10.1	10.2	10.1	10.1
IP multicast	10.0R2	10.2	10.1	10.2	10.1	10.1
IPv6	10.2	10.2	10.2	10.2	10.2	10.2
IPv6 MLD	10.2	10.2	10.2	10.2	10.2	10.2
IPv6 multicast	10.2	10.2	10.2	10.2	10.2	10.2
IPv6 Neighbor Discovery	10.2	10.2	10.2	10.2	10.2	10.2
Label Distribution Protocol (LDP)	10.0R2	10.2	10.1	10.2	10.1	10.1
Labeled switched paths (LSPs) including accounting, policers, and filtering	10.0R2	10.2	10.1	10.2	10.1	10.1
LAN-PHY mode	10.0R2	10.2	10.1	10.2	10.1	10.1
Layer 2 frame filtering	10.0R2	10.2	10.1	10.2	10.1	10.1
Layer 2 Tunneling Protocol (L2TP): (MX2010, MX2020: 12.3R4, 13.2R2, 13.3)						
• L2TP access concentrator (LAC)	10.4	10.4	10.4	10.4	10.4	10.4
• L2TP network server (LNS)	11.4	11.4	11.4	11.4	11.4	11.4
• LNS inline service support with CoS per-session shaping	11.4	11.4	11.4	11.4	11.4	11.4
• LNS inline service support without CoS per-session shaping	11.4	11.4	11.4	11.4	11.4	11.4

Copyright © 2019, Juniper Networks, Inc.

Table 34: Protocols and Applications Supported by the MX240, MX480, MX960, MX2010, and MX2020 MPCs (continued)

Protocol or Application	First Junos OS Release Supported by MPC Model Number (MPC Name)					
	MPC-3D-16XGE-SFPP (16x10GE MPC)	MX-MPC1-3D (MPC1)	MX-MPC2-3D (MPC2)	MX-MPC1-3D-Q (MPC1 Q)	MX-MPC2-3D-Q (MPC2 Q)	MX-MPC2-3D-EQ (MPC2 EQ)
• Peer interface	–	11.4	11.4	11.4	11.4	11.4
• Inline IP reassembly	13.1	13.1	13.1	13.1	13.1	13.1
IEEE 802.3ad link aggregation	10.0R2	10.2	10.1	10.2	10.1	10.1
Link Aggregation Control Protocol (LACP)	10.0R2	10.2	10.1	10.2	10.1	10.1
Local loopback	10.0R2	10.2	10.1	10.2	10.1	10.1
MAC learning, policing, accounting, and filtering	10.0R2	10.2	10.1	10.2	10.1	10.1
Mobile IP	–	–	–	–	–	–
Multi-chassis link aggregation	11.1	11.1	11.1	11.1	11.1	11.1
Multiple Tag Protocol Identifiers (TPIDs)	10.0R2	10.2	10.1	10.2	10.1	10.1
Multiprotocol Label Switching (MPLS)	10.0R2	10.2	10.1	10.2	10.1	10.1
Nonstop active routing (NSR)	10.0R2	10.2	10.1	10.2	10.1	10.1
IEEE 802.3ah OAM • Discovery and link monitoring • Fault signaling and detection • Remote loopback	11.1	11.1	11.1	11.1	11.1	11.1
Multi-topology routing (MTR)	10.0R2	10.2	10.1	10.2	10.1	10.1
Open Shortest Path First (OSPF)	10.0R2	10.2	10.1	10.2	10.1	10.1
Packet mirroring	10.0R2	10.2	10.1	10.2	10.1	10.1
IEEE 802.1ah provider backbone bridges (PBB)	–	–	–	–	–	–

Table 34: Protocols and Applications Supported by the MX240, MX480, MX960, MX2010, and MX2020 MPCs (continued)

Protocol or Application	First Junos OS Release Supported by MPC Model Number (MPC Name)					
	MPC-3D-16XGE-SFPP (16x10GE MPC)	MX-MPC1-3D (MPC1)	MX-MPC2-3D (MPC2)	MX-MPC1-3D-Q (MPC1 Q)	MX-MPC2-3D-Q (MPC2 Q)	MX-MPC2-3D-EQ (MPC2 EQ)
Quality of service (QoS) per port: • Eight queues per port • Excess-rate configuration at the traffic-control-profile level • Excess-rate and excess-priority configuration at the queue level • Shaping at port level • Shaping at queue level • Scheduling of queues based on weighted round-robin (WRR) per priority class • Tricolor marking • Weighted random early detection (WRED)	10.0R2	10.2	10.1	10.2	10.1	10.1
Quality of service (QoS) per virtual LAN (VLAN):						
• Accounting, filtering, and policing	10.0R2	10.2	10.1	10.2	10.1	10.1
• IEEE 802.1p rewrite	10.0R2	10.2	10.1	10.2	10.1	10.1
• Classification	10.0R2	10.2	10.1	10.2	10.1	10.1
• Excess-rate configuration at the traffic-control-profile level	–	–	–	10.2	10.1	10.1
• Excess-rate and excess-priority configuration at the queue level	–	–	–	10.2	10.1	10.1
• Tricolor marking	10.0R2	10.2	10.1	10.2	10.1	10.1
• Shaping at the queue level	–	–	–	10.2	10.1	10.1
• Scheduling of queues based on weighted round-robin (WRR) per priority class	–	–	–	10.2	10.1	10.1
• Weighted random early detection (WRED)	–	–	–	10.2	10.1	10.1

Copyright © 2019, Juniper Networks, Inc.

Table 34: Protocols and Applications Supported by the MX240, MX480, MX960, MX2010, and MX2020 MPCs (continued)

Protocol or Application	First Junos OS Release Supported by MPC Model Number (MPC Name)					
	MPC-3D-16XGE-SFPP (16x10GE MPC)	MX-MPC1-3D (MPC1)	MX-MPC2-3D (MPC2)	MX-MPC1-3D-Q (MPC1 Q)	MX-MPC2-3D-Q (MPC2 Q)	MX-MPC2-3D-EQ (MPC2 EQ)
Quality of service (QoS) per Point-to-Point Protocol over Ethernet (PPPoE) or Dynamic Host Configuration Protocol (DHCP) subscriber interfaces:						
• Accounting, filtering, and policing	–	10.2	10.1	10.2	10.1	10.1
• IEEE 802.1p rewrite	–	10.2	10.1	10.2	10.1	10.1
• Classification	–	10.2	10.1	10.2	10.1	10.1
• Excess-rate configuration at the traffic-control-profile level	–	–	–	10.2	10.1	10.1
• Excess-rate and excess-priority configuration at the queue level	–	–	–	10.2	10.1	10.1
• Tricolor marking	–	10.2	10.1	10.2	10.1	10.1
• Shaping at the queue level	–	–	–	10.2	10.1	10.1
• Scheduling of queues based on weighted round-robin (WRR) per priority class	–	–	–	10.2	10.1	10.1
• Weighted random early detection (WRED)	–	–	–	10.2	10.1	10.1
RSVP	10.0R2	10.2	10.1	10.2	10.1	10.1
RIP	10.0R2	10.2	10.1	10.2	10.1	10.1
SNMP	10.0R2	10.2	10.1	10.2	10.1	10.1

Copyright © 2019, Juniper Networks, Inc.

Table 34: Protocols and Applications Supported by the MX240, MX480, MX960, MX2010, and MX2020 MPCs (continued)

Protocol or Application	First Junos OS Release Supported by MPC Model Number (MPC Name)					
	MPC-3D-16XGE-SFPP (16x10GE MPC)	MX-MPC1-3D (MPC1)	MX-MPC2-3D (MPC2)	MX-MPC1-3D-Q (MPC1 Q)	MX-MPC2-3D-Q (MPC2 Q)	MX-MPC2-3D-EQ (MPC2 EQ)
Spanning Tree Protocols: • IEEE 802.1D Spanning Tree Protocol (STP) • IEEE 802.1s Multiple Spanning Tree Protocol • Per-VLAN Spanning Tree (PVST)+ • IEEE 802.1w Rapid Spanning Tree Protocol (RSTP)	10.2	10.2	10.2	10.2	10.2	10.2
Subscriber management and services: (MX2010, MX2020: 12.3R4, 13.2R2, 13.3)						
• Aggregated Ethernet over static VLANs	–	10.2	10.1	10.2	10.1	10.1
• Aggregated Ethernet over dynamic VLANs	–	10.2	10.2	10.2	10.2	10.2
• Access Node Control Protocol (ANCP) and ANCP agent	–	10.2	10.2	10.2	10.2	10.2
• DHCP access model	–	10.2	10.1	10.2	10.1	10.1
• Dynamic adjustment of shapers	–	10.2	10.1	10.2	10.1	10.1
• Dynamic PPPoE subscriber interface creation based on PPPoE service name table configuration	–	10.2	10.1	10.2	10.1	10.1
• Dynamic profiles	–	10.2	10.1	10.2	10.1	10.1
• Dynamic shaping, scheduling, and queuing	–	10.2	10.1	10.2	10.1	10.1
• Dynamic VLANs	–	10.2	10.2	10.2	10.2	10.2
• Enhanced subscriber management	15.1R4	15.1R4	15.1R4	15.1R4	15.1R4	15.1R4

Copyright © 2019, Juniper Networks, Inc.

Table 34: Protocols and Applications Supported by the MX240, MX480, MX960, MX2010, and MX2020 MPCs (continued)

Protocol or Application	First Junos OS Release Supported by MPC Model Number (MPC Name)					
	MPC-3D-16XGE-SFPP (16x10GE MPC)	MX-MPC1-3D (MPC1)	MX-MPC2-3D (MPC2)	MX-MPC1-3D-Q (MPC1 Q)	MX-MPC2-3D-Q (MPC2 Q)	MX-MPC2-3D-EQ (MPC2 EQ)
• Static and dynamic PPPoE subscriber interfaces	–	10.2	10.1	10.2	10.1	10.1
Synchronous Ethernet (SyncE)	11.2R4	12.3 with SCBE and later	12.3 with SCBE and later	12.3 with SCBE and later	12.3 with SCBE and later	12.3 with SCBE and later
Tunnel services: • GRE unicast tunneling-Supports GRE fragmentation • IP-IP unicast tunneling • Multicast tunneling • Protocol Independent Multicast (PIM) sparse mode unicast tunneling • Virtual loopback tunneling (VT)	10.0R2	10.2	10.1	10.2	10.1	10.1
Two-Way Active Measurement Protocol (TWAMP)	10.0R2	10.2	10.1	10.2	10.1	10.1
IEEE 802.1Q VLANs: • VLAN stacking and rewriting • Channels defined by two stacked VLAN tags • Flexible VLAN tagging • IP service for nonstandard TPID and stacked VLAN tags	10.0R2	10.2	10.1	10.2	10.1	10.1
Virtual Chassis redundancy	11.2	11.2	11.2	11.2	11.2	11.2
Virtual private LAN service (VPLS)	10.0R2	10.2	10.1	10.2	10.1	10.1
Virtual private network (VPN)	10.0R2	10.2	10.1	10.2	10.1	10.1
Virtual Router Redundancy Protocol (VRRP) for IPv4	10.0R2	10.2	10.1	10.2	10.1	10.1
VRRP over integrated routing and bridging (IRB) on multichassis link aggregation	13.1	13.1	13.1	13.1	13.1	13.1

Table 34: Protocols and Applications Supported by the MX240, MX480, MX960, MX2010, and MX2020 MPCs (continued)

Protocol or Application	First Junos OS Release Supported by MPC Model Number (MPC Name)					
	MPC-3D-16XGE-SFPP (16x10GE MPC)	MX-MPC1-3D (MPC1)	MX-MPC2-3D (MPC2)	MX-MPC1-3D-Q (MPC1 Q)	MX-MPC2-3D-Q (MPC2 Q)	MX-MPC2-3D-EQ (MPC2 EQ)
WAN-PHY mode	–	10.2	10.2	10.2	10.2	10.2

Related Documentation

- MX Series MPC Overview on page 11
- MPCs Supported by MX Series Routers on page 12
- *ANCP and the ANCP Agent Overview*
- *Understanding BGP*
- *Understanding MPLS Inter-AS Link Protection*
- *IEEE 802.1ag OAM Connectivity Fault Management Overview*
- *Understanding IGMP*
- *Understanding IPv6*
- *Understanding LDP-IGP Synchronization*
- *mc-ae*

Protocols and Applications Supported on the MPC1E for MX Series Routers

Table 35 on page 283 contains the first Junos OS Release support for protocols and applications on the MX240, MX480, MX960, MX2010, and MX2020 Enhanced MPCs (MPCEs).

NOTE: The MX2010 and M2020 routers support protocols and applications in Junos OS 12.3 and later. Features added after the Junos OS 12.3 release are supported on the MX2010 and MX2020 routers in the release indicated.

A dash indicates that the protocol or application is not supported.

Copyright © 2019, Juniper Networks, Inc.

Table 35: Protocols and Applications Supported by the MX240, MX480, MX960, MX2010, and MX2020 Enhanced MPCs (MPC1Es)

First Junos OS Release Supported by MPC1E Model Number (MPCE Name)		
Protocol or Application	MX-MPC1E-3D (MPC1E)	MX-MPC1E-3D-Q (MPC1E Q)
Access Node Control Protocol (ANCP)	11.2R4	11.2R4
Accepts traffic destined for GRE tunnels or DVMRP (IP-in-IP) tunnels	11.2R4	11.2R4
Bidirectional Forwarding Detection protocol (BFD)	11.2R4	11.2R4
Border Gateway Protocol (BGP)	11.2R4	11.2R4
BGP/Multiprotocol Label Switching (MPLS) virtual private networks (VPNs)	11.2R4	11.2R4
Distance Vector Multicast Routing Protocol (DVMRP) and generic routing encapsulation (GRE) support—access side and server side	11.2R4	11.2R4
IEEE 802.1ag Ethernet OAM Continuity Check protocol	11.2R4	11.2R4
IEEE 802.1ag Ethernet OAM Linktrace protocol	11.2R4	11.2R4
IEEE 802.1ag Ethernet OAM Loopback protocol	11.2R4	11.2R4
Firewall filters	11.2R4	11.2R4
Flexible Ethernet encapsulation	11.2R4	11.2R4
Graceful Routing Engine Switchover (GRES)	11.2R4	11.2R4
Ingress Differentiated Services code point (DSCP) rewrite	11.2R4	11.2R4
Hierarchical quality-of-service (HQoS)	-	12.1R3
Intelligent oversubscription	11.2R4	11.2R4
Integrated routing and bridging (IRB)	11.2R4	11.2R4
Intermediate System-to-Intermediate System (IS-IS)	11.2R4	11.2R4
Internet Group Management Protocol (IGMP) (excluding snooping)	11.2R4	11.2R4
Internet Group Management Protocol (IGMP) snooping	11.2R4	11.2R4
IPv4	11.2R4	11.2R4
IP multicast	11.2R4	11.2R4

Copyright © 2019, Juniper Networks, Inc.

Table 35: Protocols and Applications Supported by the MX240, MX480, MX960, MX2010, and MX2020 Enhanced MPCs (MPC1Es) (continued)

First Junos OS Release Supported by MPC1E Model Number (MPCE Name)		
Protocol or Application	MX-MPC1E-3D (MPC1E)	MX-MPC1E-3D-Q (MPC1E Q)
IPv6	11.2R4	11.2R4
IPv6 MLD	11.2R4	11.2R4
IPv6 multicast	11.2R4	11.2R4
IPv6 Neighbor Discovery	11.2R4	11.2R4
Label Distribution Protocol (LDP)	11.2R4	11.2R4
Labeled switched paths (LSPs) including accounting, policers, and filtering	11.2R4	11.2R4
LAN-PHY mode	11.2R4	11.2R4
Layer 2 frame filtering	11.2R4	11.2R4
Layer 2 Tunneling Protocol (L2TP):		
• L2TP access concentrator (LAC)	11.3	11.3
• L2TP network server (LNS)	11.4	11.4
• LNS inline service support with CoS per-session shaping	11.4	11.4
• LNS inline service support without CoS per-session shaping	11.4	11.4
• Peer interface	11.4	11.4
• Inline IP Reassembly	13.1	13.1
IEEE 802.3ad link aggregation	11.2R4	11.2R4
Link Aggregation Control Protocol (LACP)	11.2R4	11.2R4
Local loopback	11.2R4	11.2R4
MAC learning, policing, accounting, and filtering	11.2R4	11.2R4
Mobile IP	–	–
Multi-chassis link aggregation	11.2R4	11.2R4

Copyright © 2019, Juniper Networks, Inc.

Table 35: Protocols and Applications Supported by the MX240, MX480, MX960, MX2010, and MX2020 Enhanced MPCs (MPC1Es) (continued)

First Junos OS Release Supported by MPC1E Model Number (MPCE Name)		
Protocol or Application	MX-MPC1E-3D (MPC1E)	MX-MPC1E-3D-Q (MPC1E Q)
Multiple Tag Protocol Identifiers (TPIDs)	11.2R4	11.2R4
Multiprotocol Label Switching (MPLS)	11.2R4	11.2R4
Nonstop active routing (NSR)	11.2R4	11.2R4
IEEE 802.3ah OAM • Discovery and link monitoring • Fault signaling and detection • Remote loopback	11.2R4	11.2R4
Multitopology routing	11.2R4	11.2R4
OSPF	11.2R4	11.2R4
Packet mirroring	11.2R4	11.2R4
Per-unit scheduling	12.1R3	12.1R3
Precision Time Protocol (PTP) or IEEE 1588v2	12.3	12.3
IEEE 802.1ah provider backbone bridges (PBB)	11.2R4	11.2R4
Quality of service (QoS) per port: • Eight queues per port • Excess-rate configuration at the traffic-control-profile level • Excess-rate and excess-priority configuration at the queue level • Shaping at port level • Shaping at queue level • Scheduling of queues based on weighted round-robin (WRR) per priority class • Tricolor marking • Weighted random early detection (WRED)	11.2R4	11.2R4
Quality of service (QoS) per virtual LAN (VLAN):		
• Accounting, filtering, and policing	11.2R4	11.2R4
• IEEE 802.1p rewrite	11.2R4	11.2R4
• Classification	11.2R4	11.2R4

Table 35: Protocols and Applications Supported by the MX240, MX480, MX960, MX2010, and MX2020 Enhanced MPCs (MPC1Es) (continued)

First Junos OS Release Supported by MPC1E Model Number (MPCE Name)		
Protocol or Application	MX-MPC1E-3D (MPC1E)	MX-MPC1E-3D-Q (MPC1E Q)
• Excess-rate configuration at the traffic-control-profile level	–	11.2R4
• Excess-rate and excess-priority configuration at the queue level	–	11.2R4
• Tricolor marking	11.2R4	11.2R4
• Shaping at the queue level	–	11.2R4
• Scheduling of queues based on weighted round-robin (WRR) per priority class	–	11.2R4
• Weighted random early detection (WRED)	–	11.2R4
Quality of service (QoS) per Point-to-Point Protocol over Ethernet (PPPoE) or Dynamic Host Configuration Protocol (DHCP) subscriber interfaces:		
• Accounting, filtering, and policing	11.2R4	11.2R4
• IEEE 802.1p rewrite	11.2R4	11.2R4
• Classification	11.2R4	11.2R4
• Excess-rate configuration at the traffic-control-profile level	–	11.2R4
• Excess-rate and excess-priority configuration at the queue level	–	11.2R4
• Tricolor marking	11.2R4	11.2R4
• Shaping at the queue level	–	11.2R4
• Scheduling of queues based on weighted round-robin (WRR) per priority class	–	11.2R4
• Weighted random early detection (WRED)	–	11.2R4
RSVP	11.2R4	11.2R4
RIP	11.2R4	11.2R4
SNMP	11.2R4	11.2R4

Copyright © 2019, Juniper Networks, Inc.

Table 35: Protocols and Applications Supported by the MX240, MX480, MX960, MX2010, and MX2020 Enhanced MPCs (MPC1Es) (continued)

First Junos OS Release Supported by MPC1E Model Number (MPCE Name)		
Protocol or Application	MX-MPC1E-3D (MPC1E)	MX-MPC1E-3D-Q (MPC1E Q)
Spanning Tree Protocols: • IEEE 802.1D Spanning Tree Protocol (STP) • IEEE 802.1s Multiple Spanning Tree Protocol • Per-VLAN Spanning Tree (PVST)+ • IEEE 802.1w Rapid Spanning Tree Protocol (RSTP)	11.2R4	11.2R4
Subscriber Management:		
• Aggregated Ethernet over static VLANs	11.2R4	11.2R4
• Aggregated Ethernet over dynamic VLANs	11.2R4	11.2R4
• DHCP access model	11.2R4	11.2R4
• Dynamic adjustment of shapers	11.2R4	11.2R4
• Dynamic PPPoE subscriber interface creation based on PPPoE service name table configuration	11.2R4	11.2R4
• Dynamic profiles	11.2R4	11.2R4
• Dynamic shaping, scheduling, and queuing	11.2R4	11.2R4
• Dynamic VLANs	11.2R4	11.2R4
• Enhanced subscriber management	15.1R4	15.1R4
• Static and dynamic PPPoE subscriber interfaces	11.2R4	11.2R4
Synchronous Ethernet (SyncE)	11.2R4	11.2R4
Tunnel services: • Clear DF-Bit (Don't Fragment Bit) • GRE unicast tunneling-Supports GRE fragmentation • IP-IP unicast tunneling • Multicast tunneling • Protocol Independent Multicast (PIM) sparse mode unicast tunneling • Virtual loopback tunneling (VT)	11.2R4	11.2R4
Two-Way Active Measurement Protocol (TWAMP)	11.2R4	11.2R4

Table 35: Protocols and Applications Supported by the MX240, MX480, MX960, MX2010, and MX2020 Enhanced MPCs (MPC1Es) (continued)

First Junos OS Release Supported by MPC1E Model Number (MPCE Name)		
Protocol or Application	MX-MPC1E-3D (MPC1E)	MX-MPC1E-3D-Q (MPC1E Q)
IEEE 802.1Q VLANs: • VLAN stacking and rewriting • Channels defined by two stacked VLAN tags • Flexible VLAN tagging • IP service for nonstandard TPID and stacked VLAN tags	11.2R4	11.2R4
Virtual Chassis redundancy	11.2R4	11.2R4
Virtual private LAN service (VPLS)	11.2R4	11.2R4
Virtual private network (VPN)	11.2R4	11.2R4
Virtual Router Redundancy Protocol (VRRP) for IPv4	11.2R4	11.2R4
WAN-PHY mode	11.2R4	11.2R4

Related Documentation

- MX Series MPC Overview on page 11
- MPCs Supported by MX Series Routers on page 12

Protocols and Applications Supported by the MX240, MX480, MX960, MX2010, and MX2020 MPC2E

Table 36 on page 289 contains the first Junos OS Release support for protocols and applications on the MX240, MX480, MX960, MX2010, and MX2020 MPC2E.

A dash indicates that the protocol or application is not supported.

NOTE: The MX2010 and M2020 routers support protocols and applications in Junos OS 12.3 and later. Features added after the Junos OS 12.3 release are supported on the MX2010 and MX2020 routers in the release indicated.

A dash indicates that the protocol or application is not supported.

Copyright © 2019, Juniper Networks, Inc.

Table 36: Protocols and Applications Supported by the MX240, MX480, MX960, MX2010, and MX2020 MPC2E

Protocol or Application	First Supported Junos OS Release					
	MX-MPC2E-3D (MPC2E)	MX-MPC2E-3D-Q (MPC2E Q)	MX-MPC2E-3D-EQ (MPC2E EQ)	MX-MPC2E-3D-P (MPC2E P)	MX-MPC2E-3D-NG (MPC2E NG)	MX-MPC2E-3D-NG-Q (MPC2E NG-Q)
Access Node Control Protocol (ANCP)	11.2R4	11.2R4	11.2R4	12.2	14.1R4	14.1R4
Accepts traffic destined for generic routing encapsulation (GRE) tunnels or Distance Vector Multicast Routing Protocol (DVMRP) (IP-in-IP) tunnels • *Dynamic* • *Manual*	11.2R4	11.2R4	11.2R4	12.2	14.1R4	14.1R4
Bidirectional Forwarding Detection protocol (BFD)	11.2R4	11.2R4	11.2R4	12.2	14.1R4	14.1R4
Border Gateway Protocol (BGP)	11.2R4	11.2R4	11.2R4	12.2	14.1R4	14.1R4
BGP/*MPLS* virtual private networks (VPNs)	11.2R4	11.2R4	11.2R4	12.2	14.1R4	14.1R4
DVMRP and GRE support—access side and server side	11.2R4	11.2R4	11.2R4	12.2	14.1R4	14.1R4
Understanding How Dynamic Power Management Enables Better Utilization of Power	—	—	—	—	15.1	15.1
Flexible Queuing Mode NOTE: Flexible queuing mode is supported only on non-HQoS variants.	—	—	—	—	15.1	—
IEEE 802.1ag Ethernet OAM Continuity Check protocol	11.2R4	11.2R4	11.2R4	12.2	14.1R4	14.1R4
IEEE 802.1ag Ethernet OAM Linktrace protocol	11.2R4	11.2R4	11.2R4	12.2	14.1R4	14.1R4
IEEE 802.1ag Ethernet OAM Loopback protocol	11.2R4	11.2R4	11.2R4	12.2	14.1R4	14.1R4
Firewall filters	11.2R4	11.2R4	11.2R4	12.2	14.1R4	14.1R4
Flexible Ethernet encapsulation	11.2R4	11.2R4	11.2R4	12.2	14.1R4	14.1R4
Graceful Routing Engine Switchover (GRES)	11.2R4	11.2R4	11.2R4	12.2	14.1R4	14.1R4

Copyright © 2019, Juniper Networks, Inc.

Table 36: Protocols and Applications Supported by the MX240, MX480, MX960, MX2010, and MX2020 MPC2E (continued)

Protocol or Application	First Supported Junos OS Release					
	MX-MPC2E-3D (MPC2E)	MX-MPC2E-3D-Q (MPC2E Q)	MX-MPC2E-3D-EQ (MPC2E EQ)	MX-MPC2E-3D-P (MPC2E P)	MX-MPC2E-3D-NG (MPC2E NG)	MX-MPC2E-3D-NG-Q (MPC2E NG-Q)
Ingress Differentiated Services code point (DSCP) rewrite	11.2R4	11.2R4	11.2R4	12.2	14.1R4	14.1R4
Ingress hierarchical quality-of-service (HQoS) shaping and *hierarchical-scheduler*: • Group of virtual LANs (VLANs) level • Virtual LAN (VLAN) level • Port level	–	–	–	–	15.1R1	15.1R1
Hierarchical quality-of-service (HQoS)	–	12.1R3	12.1R3	–	-	15.1R1
Intelligent Oversubscription on MIC and MPC Interfaces Overview	11.2R4	11.2R4	11.2R4	12.2	14.1R4	14.1R4
Integrated routing and bridging (IRB)	11.2R4	11.2R4	11.2R4	12.2	14.1R4	14.1R4
Unified *In-service software upgrade (Unified ISSU)*	11.2R1	11.2R1	11.2R1	11.2R1	17.1R1	17.1R1
IS-IS	11.2R4	11.2R4	11.2R4	12.2	14.1R4	14.1R4
Internet Group Management Protocol (IGMP) (excluding snooping)	11.2R4	11.2R4	11.2R4	12.2	14.1R4	14.1R4
Internet Group Management Protocol (IGMP) snooping	11.2R4	11.2R4	11.2R4	12.2	14.1R4	14.1R4
IPv4	11.2R4	11.2R4	11.2R4	12.2	14.1R4	14.1R4
IP multicast	11.2R4	11.2R4	11.2R4	12.2	14.1R4	14.1R4
IPv6	11.2R4	11.2R4	11.2R4	12.2	14.1R4	14.1R4
IPv6 MLD	11.2R4	11.2R4	11.2R4	12.2	14.1R4	14.1R4
IPv6 multicast	11.2R4	11.2R4	11.2R4	12.2	14.1R4	14.1R4
IPv6 Neighbor Discovery	11.2R4	11.2R4	11.2R4	12.2	14.1R4	14.1R4
Label Distribution Protocol (LDP)	11.2R4	11.2R4	11.2R4	12.2	14.1R4	14.1R4

Copyright © 2019, Juniper Networks, Inc.

Table 36: Protocols and Applications Supported by the MX240, MX480, MX960, MX2010, and MX2020 MPC2E (continued)

Protocol or Application	First Supported Junos OS Release					
	MX-MPC2E-3D (MPC2E)	MX-MPC2E-3D-Q (MPC2E Q)	MX-MPC2E-3D-EQ (MPC2E EQ)	MX-MPC2E-3D-P (MPC2E P)	MX-MPC2E-3D-NG (MPC2E NG)	MX-MPC2E-3D-NG-Q (MPC2E NG-Q)
Labeled-switched-paths (LSPs) including accounting, policers, and filtering	11.2R4	11.2R4	11.2R4	12.2	14.1R4	14.1R4
LAN-PHY mode	11.2R4	11.2R4	11.2R4	12.2	14.1R4	14.1R4
Layer 2 frame filtering	11.2R4	11.2R4	11.2R4	12.2	14.1R4	14.1R4
Layer 2 Tunneling Protocol (L2TP):					14.1R4	14.1R4
• L2TP access concentrator (LAC)	11.3	11.3	11.3	12.2	14.1R4	14.1R4
• L2TP network server (LNS)	11.4	11.4	11.4	12.2	14.1R4	14.1R4
• LNS inline service support with CoS per-session shaping	11.4	11.4	11.4	12.2	14.1R4	14.1R4
• LNS inline service support without CoS per-session shaping	11.4	11.4	11.4	12.2	14.1R4	14.1R4
• Peer interface	11.4	11.4	11.4	12.2	14.1R4	14.1R4
• Inline IP Reassembly	13.1	13.1	13.1	13.1	14.1R4	14.1R4
Link aggregation (IEEE 802.3ad)	11.2R4	11.2R4	11.2R4	12.2	14.1R4	14.1R4
Link Aggregation Control Protocol (LACP)	11.2R4	11.2R4	11.2R4	12.2	14.1R4	14.1R4
Local loopback	11.2R4	11.2R4	11.2R4	12.2	14.1R4	14.1R4
MAC learning, policing, accounting, and filtering	11.2R4	11.2R4	11.2R4	12.2	14.1R4	14.1R4
Mobile IP	–	–	–	–		
Multi-chassis link aggregation	11.2R4	11.2R4	11.2R4	12.2	14.1R4	14.1R4
Multiple Tag Protocol Identifiers (TPIDs)	11.2R4	11.2R4	11.2R4	12.2	14.1R4	14.1R4
Multiprotocol Label Switching (*MPLS*)	11.2R4	11.2R4	11.2R4	12.2	14.1R4	14.1R4
Nonstop active routing (NSR)	11.2R4	11.2R4	11.2R4	12.2	14.1R4	14.1R4

Copyright © 2019, Juniper Networks, Inc.

Table 36: Protocols and Applications Supported by the MX240, MX480, MX960, MX2010, and MX2020 MPC2E (continued)

Protocol or Application	First Supported Junos OS Release					
	MX-MPC2E-3D (MPC2E)	MX-MPC2E-3D-Q (MPC2E Q)	MX-MPC2E-3D-EQ (MPC2E EQ)	MX-MPC2E-3D-P (MPC2E P)	MX-MPC2E-3D-NG (MPC2E NG)	MX-MPC2E-3D-NG-Q (MPC2E NG-Q)
IEEE 802.3ah OAM • Discovery and link monitoring • Fault signaling and detection • Remote loopback	11.2R4	11.2R4	11.2R4	12.2	14.1R4	14.1R4
Multitopology routing	11.2R4	11.2R4	11.2R4	12.2	14.1R4	14.1R4
OSPF	11.2R4	11.2R4	11.2R4	12.2	14.1R4	14.1R4
Packet mirroring	11.2R4	11.2R4	11.2R4	12.2	14.1R4	14.1R4
Precision Time Protocol (PTP) or IEEE 1588v2	12.3	12.3	12.3	12.2	15.1R2	15.1R2
IEEE 802.1ah provider backbone bridges (PBB)	–	–	–	–	–	–
Quality of service (QoS) per port: • Eight queues per port • Excess-rate configuration at the traffic-control-profile level • Excess-rate and excess-priority configuration at the queue level • Shaping at port level • Shaping at queue level • Scheduling of queues based on weighted round-robin (WRR) per priority class • Tricolor marking • Weighted random early detection (WRED)	11.2R4	11.2R4	11.2R4	12.2	14.1R4	14.1R4
Quality of service (QoS) per virtual LAN (VLAN):				–	14.1R4	14.1R4
• Accounting, filtering, and policing	11.2R4	11.2R4	11.2R4	12.2	14.1R4	14.1R4
• IEEE 802.1p rewrite	11.2R4	11.2R4	11.2R4	12.2	14.1R4	14.1R4
• Classification	11.2R4	11.2R4	11.2R4	12.2	14.1R4	14.1R4

Copyright © 2019, Juniper Networks, Inc.

Table 36: Protocols and Applications Supported by the MX240, MX480, MX960, MX2010, and MX2020 MPC2E (continued)

Protocol or Application	First Supported Junos OS Release					
	MX-MPC2E-3D (MPC2E)	MX-MPC2E-3D-Q (MPC2E Q)	MX-MPC2E-3D-EQ (MPC2E EQ)	MX-MPC2E-3D-P (MPC2E P)	MX-MPC2E-3D-NG (MPC2E NG)	MX-MPC2E-3D-NG-Q (MPC2E NG-Q)
• Excess-rate configuration at the traffic-control-profile level	–	11.2R4	11.2R4	12.2	14.1R4	14.1R4
• Excess-rate and excess-priority configuration at the queue level	–	11.2R4	11.2R4	12.2	14.1R4	14.1R4
• Tricolor marking	11.2R4	11.2R4	11.2R4	12.2	14.1R4	14.1R4
• Shaping at the queue level	–	11.2R4	11.2R4	12.2	14.1R4	14.1R4
• Scheduling of queues based on weighted round-robin (WRR) per priority class	–	11.2R4	11.2R4	12.2	14.1R4	14.1R4
• Weighted random early detection (WRED)	–	11.2R4	11.2R4	12.2	14.1R4	14.1R4
Quality of service (QoS) per Point-to-Point Protocol over Ethernet (PPPoE) or Dynamic Host Configuration Protocol (DHCP) subscriber interfaces:					14.1R4	14.1R4
• Accounting, filtering, and policing	11.2R4	11.2R4	11.2R4	12.2	14.1R4	14.1R4
• IEEE 802.1p rewrite	11.2R4	11.2R4	11.2R4	12.2	14.1R4	14.1R4
• Classification	11.2R4	11.2R4	11.2R4	12.2	14.1R4	14.1R4
• Excess-rate configuration at the traffic-control-profile level	–	11.2R4	11.2R4	12.2	14.1R4	14.1R4
• Excess-rate and excess-priority configuration at the queue level	–	11.2R4	11.2R4	12.2	14.1R4	14.1R4
• Tricolor marking	11.2R4	11.2R4	11.2R4	12.2	14.1R4	14.1R4
• Shaping at the queue level	–	11.2R4	11.2R4	12.2	14.1R4	14.1R4
• Scheduling of queues based on weighted round-robin (WRR) per priority class	–	11.2R4	11.2R4	12.2	14.1R4	14.1R4
• Weighted random early detection (WRED)	–	11.2R4	11.2R4	12.2	14.1R4	14.1R4

Copyright © 2019, Juniper Networks, Inc.

Table 36: Protocols and Applications Supported by the MX240, MX480, MX960, MX2010, and MX2020 MPC2E (continued)

Protocol or Application	First Supported Junos OS Release					
	MX-MPC2E-3D (MPC2E)	MX-MPC2E-3D-Q (MPC2E Q)	MX-MPC2E-3D-EQ (MPC2E EQ)	MX-MPC2E-3D-P (MPC2E P)	MX-MPC2E-3D-NG (MPC2E NG)	MX-MPC2E-3D-NG-Q (MPC2E NG-Q)
RSVP	11.2R4	11.2R4	11.2R4	12.2	14.1R4	14.1R4
RIP	11.2R4	11.2R4	11.2R4	12.2	14.1R4	14.1R4
SNMP	11.2R4	11.2R4	11.2R4	12.2	14.1R4	14.1R4
Spanning Tree Protocols: • IEEE 802.1D Spanning Tree Protocol (STP) • IEEE 802.1s Multiple Spanning Tree Protocol • Per-VLAN Spanning Tree (PVST)+ • IEEE 802.1w Rapid Spanning Tree Protocol (RSTP)	11.2R4	11.2R4	11.2R4	12.2	14.1R4	14.1R4
Subscriber Management:					14.1R4	14.1R4
• Aggregated Ethernet over static VLANs	11.2R4	11.2R4	11.2R4	12.2	14.1R4	14.1R4
• Aggregated Ethernet over dynamic VLANs	11.2R4	11.2R4	11.2R4	12.2	14.1R4	14.1R4
• DHCP access model	11.2R4	11.2R4	11.2R4	12.2	14.1R4	14.1R4
• Dynamic adjustment of shapers	11.2R4	11.2R4	11.2R4	12.2	14.1R4	14.1R4
• Dynamic PPPoE subscriber interface creation based on PPPoE service name table configuration	11.2R4	11.2R4	11.2R4	12.2	14.1R4	14.1R4
• Dynamic profiles	11.2R4	11.2R4	11.2R4	12.2	14.1R4	14.1R4
• Dynamic shaping, scheduling, and queuing	11.2R4	11.2R4	11.2R4	12.2	14.1R4	14.1R4
• Dynamic VLANs	11.2R4	11.2R4	11.2R4	12.2	14.1R4	14.1R4
• Enhanced subscriber management	15.1R4	15.1R4	15.1R4	15.1R4	15.1R4	15.1R4
• Static and dynamic PPPoE subscriber interfaces	11.2R4	11.2R4	11.2R4	12.2	14.1R4	14.1R4

Copyright © 2019, Juniper Networks, Inc.

Table 36: Protocols and Applications Supported by the MX240, MX480, MX960, MX2010, and MX2020 MPC2E (continued)

Protocol or Application	First Supported Junos OS Release					
	MX-MPC2E-3D (MPC2E)	MX-MPC2E-3D-Q (MPC2E Q)	MX-MPC2E-3D-EQ (MPC2E EQ)	MX-MPC2E-3D-P (MPC2E P)	MX-MPC2E-3D-NG (MPC2E NG)	MX-MPC2E-3D-NG-Q (MPC2E NG-Q)
Synchronous Ethernet (SyncE)	11.2R4	11.2R4	11.2R4	12.2	14.1R4	14.1R4
Tunnel services: • Clear DF-Bit (Don't Fragment Bit) • GRE unicast tunneling-Supports GRE fragmentation • IP-IP unicast tunneling • Multicast tunneling • Protocol Independent Multicast (PIM) sparse mode unicast tunneling • Virtual loopback tunneling (VT)	11.2R4	11.2R4	11.2R4	12.2	14.1R4	14.1R4
Two-Way Active Measurement Protocol (TWAMP)	11.2R4	11.2R4	11.2R4	12.2	14.1R4	14.1R4
VLANs IEEE 802.1Q • VLAN stacking and rewriting • Channels defined by two stacked VLAN tags • Flexible VLAN tagging • IP service for nonstandard TPID and stacked VLAN tags	11.2R4	11.2R4	11.2R4	12.2	14.1R4	14.1R4
Virtual Chassis redundancy	11.2R4	11.2R4	11.2R4	12.2	14.1R4	14.1R4
Virtual private LAN service (VPLS)	11.2R4	11.2R4	11.2R4	12.2	14.1R4	14.1R4
Virtual private network (VPN)	11.2R4	11.2R4	11.2R4	12.2	14.1R4	14.1R4
Virtual Router Redundancy Protocol (VRRP) for IPv4	11.2R4	11.2R4	11.2R4	12.2	14.1R4	14.1R4
WAN-PHY mode	11.2R4	11.2R4	11.2R4	12.2	14.1R4	14.1R4

Related Documentation

- MX Series MPC Overview on page 11
- MPCs Supported by MX Series Routers on page 12

Protocols and Applications Supported by the MPC3E on MX Series Routers

Table 37 on page 296 lists the first supported Junos OS Release for MPC3E protocols and applications for the MX240, MX480, MX960, MX2010, and MX2020 routers. The protocols and applications support feature parity with Junos OS Release 10.4.

NOTE: The MX2010 and M2020 routers support protocols and applications in Junos OS 12.3 and later. Features added after the Junos OS 12.3 release are supported on the MX2010 and MX2020 routers in the release indicated.

A dash indicates that the protocol or application is not supported.

Table 37: Protocols and Applications Supported by MPC3E Cards for MX Series Routers

Protocol or Application	First Supported Junos OS Release		
	MPC3E-3D	MPC3E-3D-NG	MPC3E-3D-NG-Q
Access Node Control Protocol (ANCP)	—	14.1R4	14.1R4
Bidirectional Forwarding Detection protocol (BFD)	12.1	14.1R4	14.1R4
Border Gateway Protocol (BGP)	12.1	14.1R4	14.1R4
Bridge protocol data units (BPDUs)	12.2	14.1R4	14.1R4
BGP/*MPLS* virtual private networks (VPNs)	12.1	14.1R4	14.1R4
Class of service (CoS): • Maintain CoS across internal tunnel interfaces • Packet rewrites • Rate limit option for per-port queues • Configurable 802.1p inheritance: push and swap from the hidden tag • Configurable shaping overhead for scheduling • Behavior aggregate (BA) classification • BA classification based on 802.1p of “payload” for core-facing VPLS interfaces • BA DSCP classification of MPLS packets for L3VPN/VPLS LSI and MPLS interfaces • BA DSCP classification for VPLS/CCC family	12.1	14.1R4	14.1R4

Copyright © 2019, Juniper Networks, Inc.

Table 37: Protocols and Applications Supported by MPC3E Cards for MX Series Routers (continued)

Protocol or Application	First Supported Junos OS Release		
	MPC3E-3D	MPC3E–3D-NG	MPC3E-3D-NG-Q
Class of service (CoS) per port: • Eight queues per port • Excess-rate and excess-priority configurations at the queue level • Shaping at the port level • Shaping at the queue level • Scheduling of queues based on the weighted round-robin (WRR) per excess-priority class • Round-robin scheduling of the queues per priority class • Weighted random early detection (WRED) NOTE: Fine-grained queuing and input queuing are not supported for the MPC3E-3D.	12.1	14.1R4	14.1R4
Class of service (CoS) per virtual LAN (VLAN): • Accounting, filtering, and policing • IEEE 802.1p rewrite • Classification • Tricolor marking	12.1	14.1R4	14.1R4
Class of service (CoS) per Point-to-Point Protocol over Ethernet (PPPoE) or Dynamic Host Configuration Protocol (DHCP) subscriber interfaces: • Accounting, filtering, and policing • IEEE 802.1p rewrite • Classification • Excess-rate and excess-priority configuration at the queue level • Tricolor marking • Shaping at the queue level • Scheduling of queues based on weighted round-robin (WRR) per priority class • Weighted random early detection (WRED)	—	14.1R4	14.1R4
Distributed Denial-of-Service (DDoS) Protection	12.1	14.1R4	14.1R4
DVMRP and GRE support—access side and server side	—	14.1R4	14.1R4
Dynamic Power Management	15.1	15.1	15.1
Push a tag on Ethernet VPLS and Ethernet CCC tag encapsulations	—	14.1R4	14.1R4
Enhanced subscriber management	15.1R4	15.1R4	15.1R4
Ethernet Ring Protection Switching with multiple G.8032 instances	—	14.1R4	14.1R4

Copyright © 2019, Juniper Networks, Inc.

Table 37: Protocols and Applications Supported by MPC3E Cards for MX Series Routers (continued)

Protocol or Application	First Supported Junos OS Release		
	MPC3E-3D	MPC3E-3D-NG	MPC3E-3D-NG-Q
Flexible Queuing Mode NOTE: Flexible queuing mode is supported only on non-HQoS variants.	15.1	15.1	15.1
IEEE 802.1ag Ethernet OAM Continuity Check protocol	12.2	14.1R4	14.1R4
IEEE 802.1ag Ethernet OAM Linktrace protocol	12.2	14.1R4	14.1R4
IEEE 802.1ag Ethernet OAM Loopback protocol	12.2	14.1R4	14.1R4
IEEE 802.1ag Maintenance Association Intermediate Point (MIP) support, continuity check message (CCM), stacked VLAN tagging, trunk ports, support for VPLS/VPWS, VLAN circuit cross-connect (CCC) encapsulation and translational cross-connect (TCC) encapsulation	12.2	14.1R4	14.1R4
IEEE 802.1ag Optional type, length, and value (TLVs) support *Port Status TLV and Interface Status TLV*	—	14.1R4	14.1R4
IEEE 802.3ah distributed periodic packet management (PPM) process , alarm indication signal (AIS), and remote defect indication (RDI)	12.2	14.1R4	14.1R4
Firewall filters and policers: • Policer support for aggregated Ethernet • Aggregate firewall-based policer for all families of a logical interface • Intelligent hierarchial policers NOTE: Intelligent hierarchial policers are supported from Junos OS Release 13.3. • Set forwarding class and loss priority for Routing Engine-generated packets by using a firewall • Physical interface policers, applying policers to the entire port • Lower policer limit from 32K to 8K • Egress IEEE 802.1p multi-field (MF) and BA classification for VPLS • Differentiated Services Code Point (DSCP) rewrite for IPv4 and IPv6 NOTE: The packet length used for the policer included in the Layer 2 header is not supported for the MPC3E-3D in release 12.2.	12.1	14.1R4	14.1R4
Flexible Ethernet encapsulation	12.1	14.1R4	14.1R4
Generic Routing Encapsulation (GRE) tunnels or Distance Vector Multicast Routing Protocol (DVMRP) (IP-in-IP) tunnels • *Dynamic* • *Manual*	12.1	14.1R4	14.1R4
Graceful Routing Engine Switchover (GRES)	12.1	14.1R4	14.1R4

Copyright © 2019, Juniper Networks, Inc.

Table 37: Protocols and Applications Supported by MPC3E Cards for MX Series Routers (continued)

Protocol or Application	First Supported Junos OS Release		
	MPC3E-3D	MPC3E–3D-NG	MPC3E-3D-NG-Q
Hierarchical Quality of Service (HQoS)	—	14.1R4	14.1R4
IGMP snooping with bridging, IRB, and VPLS	—	14.1R4	14.1R4
IGMPv3 support with snooping disabled	12.1	14.1R4	14.1R4
Ingress and egress hierarchical class-of-service (CoS) shaping and *hierarchical-scheduler*: • Group of virtual LANs (VLANs) level • VLAN level • Port level	—	14.1R4	14.1R4
Inline flow monitoring	12.2	14.1R4	14.1R4
Intelligent Oversubscription on MIC and MPC Interfaces Overview	12.1	14.1R4	14.1R4
Integrated routing and bridging (IRB)	12.2	14.1R4	14.1R4
Unified *In-service software upgrade (Unified ISSU).* NOTE: ISSU is not supported on MPC3E-NG with 14.1R4.	13.3	17.1R1	17.1R1
Interoperability with MPCs and existing DPCs	12.1	14.1R4	14.1R4
Interoperability with multiservices DPCs	12.2	14.1R4	14.1R4
Interoperability with MX Series Flexible PIC Concentrators (MX-FPC)	—	14.1R4	14.1R4
IPv4	12.1	14.1R4	14.1R4
IPv4 multicast	12.1	14.1R4	14.1R4
IPv6	12.1	14.1R4	14.1R4
IPv6 MLD	12.1	14.1R4	14.1R4
IPv6 multicast	12.1	14.1R4	14.1R4
IPv6 Neighbor Discovery	12.1	14.1R4	14.1R4
IS-IS	12.1	14.1R4	14.1R4
ITU-T Y.1731 timestamping support on MX Series routers	—	14.1R4	14.1R4

Copyright © 2019, Juniper Networks, Inc.

Table 37: Protocols and Applications Supported by MPC3E Cards for MX Series Routers (continued)

Protocol or Application	First Supported Junos OS Release		
	MPC3E-3D	MPC3E–3D-NG	MPC3E-3D-NG-Q
Flow monitoring and services: • Active monitoring (multiple v8 version j-flow templates) • Active monitoring (cflowed version 9 templates) • Port mirroring family VPLS, bridge CCC encapsulation (VPWS) • Packet slice for port mirroring • Inline flow monitoring on MPC3E • Flow monitoring on multiservices DPCs NOTE: Flow monitoring on Multiservices DPCs is not supported for the MPC3E-3D in release 12.2..	12.2	14.1R4	14.1R4
Labeled-switched-paths (LSPs) including accounting, policers, and filtering	12.1	14.1R4	14.1R4
Layer 2 features: • Trunk ports • Layer 2 support for MX Series Virtual Chassis • Layer 2 and Layer 2.5, IRB and Spanning Tree Protocols (xSTP) • IEEE 802.1ad provider bridges • Layer 2 protocol tunneling (L2PT) support • Layer 2 Tunneling Protocol (L2TP) • Multi-chassis LAG—active/active and active/standby • Multi-chassis LAG—active/active with IGMP snooping • Link aggregation group (LAG)—VLAN-CCC encapsulation NOTE: LAG features and IGMP snooping with bridging, IRB, and VPLS are not supported for the MPC3E-3D in release 12.2.	12.2	14.1R4	14.1R4
Layer 2 VPN interfaces support VLAN ID list	12.1	14.1R4	14.1R4
Label Distribution Protocol (*LDP*)	12.1	14.1R4	14.1R4
Link aggregation (IEEE 802.3ad)	12.1	14.1R4	14.1R4
Link Aggregation Control Protocol (LACP)	12.1	14.1R4	14.1R4
Link Layer Discovery Protocol (LLDP)	—	14.1R4	14.1R4
Local loopback	12.1	14.1R4	14.1R4
MAC learning, policing, accounting, and filtering	12.1	14.1R4	14.1R4
Mobile IP	—	14.1R4	14.1R4
Multichassis link aggregation	—	14.1R4	14.1R4

Copyright © 2019, Juniper Networks, Inc.

Table 37: Protocols and Applications Supported by MPC3E Cards for MX Series Routers (continued)

Protocol or Application	First Supported Junos OS Release		
	MPC3E-3D	MPC3E–3D-NG	MPC3E-3D-NG-Q
Multiple Tag Protocol Identifiers (TPIDs)	12.1	14.1R4	14.1R4
MPLS: • Switching of pseudowire segments (multisegment pseudowires with BGP-L2VPN) • LDP signaling for VPLS (LDP-VPLS) and MAC flush message processing (MAC-FLUSH-TLV) • RSVP graceful restart interoperability with Cisco using Nodal Hello • Failure action on BFD session down of RSVP LSPs • OSPF and IS-IS loop-free alternates (LFA) • 4/5 label MPLS operation • Virtual circuit connectivity verification (VCCV) BFD • Point to multipoint using the enhanced-ip command (support for NG-MVPN and P2MP load balancing over aggregated Ethernet) • MPLS-FRR bypass link protection • Load sharing across 64 ECMP next hops • MPLS-FRR VPLS instance prioritization • Five label stack on ingress	12.1	14.1R4	14.1R4
MPLS node protection, link protection, and statistics for static LSPs	12.1	14.1R4	14.1R4
mvrp	—	14.1R4	14.1R4
Multitopology routing	12.1	14.1R4	14.1R4
Nonstop active routing (NSR)	12.1	14.1R4	14.1R4
OSPF	12.1	14.1R4	14.1R4
Packet mirroring	12.2	14.1R4	14.1R4
Precision Time Protocol (PTP) (IEEE 1588)	12.2	17.2R1	17.2R1
IEEE 802.1ah Provider Bridging (PBB)	—	14.1R4	14.1R4
RSVP	12.1	14.1R4	14.1R4
RIP	12.1	14.1R4	14.1R4
SNMP	12.1	14.1R4	14.1R4

Copyright © 2019, Juniper Networks, Inc.

Table 37: Protocols and Applications Supported by MPC3E Cards for MX Series Routers (continued)

Protocol or Application	First Supported Junos OS Release		
	MPC3E-3D	MPC3E–3D-NG	MPC3E-3D-NG-Q
Spanning Tree Protocols: • *IEEE 802.1s Multiple Spanning Tree Protocol (MSTP)* (part of IEEE 802.1Q VLANs) • *IEEE 802.1w Rapid Spanning Tree Protocol (RSTP)* • *Spanning-Tree Protocols (STP)* • Per-VLAN Spanning Tree (PVST) • Bridge protocol data units (BPDUs) guard and loop guard • STP inter-protocol action profiles and MAC flush (in VPLS multi-homing, flush all MACs when there is a change in the STP interface state due to root protect)	12.2	14.1R4	14.1R4
Subscriber management and services (MX2010, MX2020: 12.3R4, 13.2R2, 13.3): • Aggregated Ethernet over static VLANs • Aggregated Ethernet over dynamic VLANs • *ANCP and the ANCP Agent Overview* • DHCP access model • Dynamic adjustment of shapers • Dynamic PPPoE subscriber interface creation based on PPPoE service name tables • Dynamic profiles • Dynamic shaping, scheduling, and queuing • Dynamic VLANs • Per unit scheduling • Static and dynamic PPPoE subscriber interfaces	–	14.1R4	14.1R4
Synchronous Ethernet	13.2	14.1R4	14.1R4
Two-Way Active Measurement Protocol (TWAMP)	—	14.1R4	14.1R4
Tunnel services • Clear DF-Bit (Don't Fragment Bit)	12.1	14.1R4	14.1R4
Unified in-service software upgrade (ISSU) NOTE: ISSU is not supported on MPC3E-NG with 14.1R4.	13.3	17.1R1	17.1R1
Unnumbered Ethernet Interface	12.1	14.1R4	14.1R4

Copyright © 2019, Juniper Networks, Inc.

Table 37: Protocols and Applications Supported by MPC3E Cards for MX Series Routers (continued)

Protocol or Application	First Supported Junos OS Release		
	MPC3E-3D	MPC3E–3D-NG	MPC3E-3D-NG-Q
VLANs IEEE 802.1Q: • VLAN stacking and rewriting • Channels defined by two stacked VLAN tags • Flexible VLAN tagging • IP service for nonstandard TPID and stacked VLAN tags	12.1	14.1R4	14.1R4
Virtual Chassis: MPLS IPv4 and IPv6, unicast, multicast forwarding, VPLS, NSR for Layer 3/MPLS services	13.2R1	14.1R4	14.1R4
Virtual private LAN service (VPLS): • BGP multihoming for inter-AS VPLS • Gigabit Ethernet as core-facing interface • Configurable label block sizes • Hashing L3/L4 fields under Ethernet pseudowire for VPLS encapsulation, CCC encapsulation, and MPLS encapsulation • VPLS flood forwarding table filter (FTF), input FTF • Broadcast, unicast unknown, and multicast (BUM) traffic hashing over LAG	12.1	14.1R4	14.1R4
Virtual private network (VPN)	12.1	14.1R4	14.1R4
Virtual Router Redundancy Protocol (VRRP) for IPv4	12.1	14.1R4	14.1R4
VPLS packet flooding to the right set of interfaces across mesh groups	—	14.1R4	14.1R4
WAN-PHY mode	12.2	14.1R4	14.1R4

Related Documentation

- MPC3E on page 113
- MICs Supported by MX Series Routers on page 18

Protocols and Applications Supported on the MPC4E for MX Series Routers

Table 38 on page 303 contains the first Junos OS Release support for protocols and applications on the MPC4E. The protocols and applications support feature parity with Junos OS Release 12.2. A dash indicates that the protocol or application is not supported.

Table 38: Protocols and Applications Supported by the MX Series MPC4E

Protocol or Application	First Supported Junos OS Release
Bidirectional Forwarding Detection protocol (BFD)	12.3R2

Table 38: Protocols and Applications Supported by the MX Series MPC4E (continued)

Protocol or Application	First Supported Junos OS Release
Border Gateway Protocol (BGP)	12.3R2
Bridge protocol data units (BPDUs)	12.3R2
Class of service (CoS): • Behavior Aggregate (BA) classification • Forwarding class loss priority through logical tunnels (LT) • Static VLAN mapping to a specific forwarding class using a multi-field (MF) classifier • Packet rewrites • *Configurable IEEE 802.1p inheritance* • Rate-limit option for per-port queues • Configurable shaping overhead for scheduling • Weighted Random Early Detection (WRED) • *Intelligent oversubscription on MIC and MPC interfaces* • *Class of Service on Ethernet pseudowires on Logical Tunnel (LT) interfaces* • Fine-grained authentication for RE-generated packets • IEEE 802.1ad S-TAG, exiting/incoming core with label-switched interfaces (LSIs) • Egress IEEE 802.1p multifield (MF) and BA classification for VPLS (MX series only)	12.3R2
Class of service (CoS) per port: • Eight queues per port • Excess-rate and excess-priority configuration at the queue level • Shaping at the port level and queue level • Scheduling of queues based on weighted round-robin (WRR) per excess-priority class • Round-robin scheduling of the queues per priority class • Weighted random early detection (WRED) • Rate limit option for per-port queues	12.3R2 NOTE: Fine-grained queuing and input queuing are not supported.
Class of service (CoS) per virtual LAN (VLAN): • Accounting, filtering, and policing • IEEE 802.1p rewrite • Classification • Tricolor marking	12.3R2

Copyright © 2019, Juniper Networks, Inc.

Table 38: Protocols and Applications Supported by the MX Series MPC4E (continued)

Protocol or Application	First Supported Junos OS Release
Connectivity Fault Management (CFM) protocols and features (IEEE 802.1ag): • *Ethernet OAM Continuity Check Message (CCM) protocol* • *Ethernet OAM Linktrace protocol* • *Ethernet OAM Loopback protocol* • *Maintenance Intermediate Points (MIPs)* • Stacked VLAN tagging • Trunk ports • VPLS/VPWS • VLAN circuit cross-connect (CCC) encapsulation • Transitional cross-connect (TCC) encapsulation	12.3R2
Distributed Denial-of-Service (DDoS) Protection	12.3R2
Distributed Periodic Packet Management Process (PPMP)	12.3R2
Distance Vector Multicast Routing Protocol (DVMRP) Tunnels—access side and server side	12.3R2
Ethernet Alarm Indication Signal (ETH-AIS)	12.3R2
Ethernet Ring Protection Switching with multiple G.8032 instances	12.3R2
Firewall filters and policers: • *Intelligent Hierarchical Policers* • Policer support for aggregated Ethernet • Aggregate firewall-based policer for all families of a logical interface • *Layer 2 policers* • Set forwarding class loss priority for Routing Engine (RE)-generated packets by using a firewall • Physical interface policers, applying policer to the entire port • *Filter-specific counters and filters*	12.3R2
Flexible Ethernet encapsulation	12.3R2
Graceful routing engine switchover (GRES)	12.3R2
Configuring Generic Routing Encapsulation Tunneling—access side and server side	12.3R2
IGMPv3 support with snooping disabled	12.3R2
Ingress and egress hierarchical class-of-service (CoS) shaping and *hierarchical-scheduler*: • Group of virtual LANs (VLANs) level • VLAN level • Port level	–

Table 38: Protocols and Applications Supported by the MX Series MPC4E (continued)

Protocol or Application	First Supported Junos OS Release
Inline flow monitoring	12.3R2
Intelligent oversubscription on the Trio MPC/MIC interfaces	12.3R2
Integrated Routing and Bridging (IRB)	12.3R2
Unified *In-service software upgrade (Unified ISSU)*	13.3
Interoperability with MX Series Flexible PIC Concentrators (MX-FPC)	12.3R2
Interoperability with MPCs and existing DPCs	12.3R2
Interoperability with Juniper Networks 100-Gigabit Ethernet PIC	12.3R2
Interoperability with MX Series Application Services Modular Line Card (AS-MLC)	12.3R2
IPv4	12.3R2
IPv4 multicast	12.3R2
IPv6	12.3R2
IPv6 Multicast Listener Discovery (MLD)	12.3R2
IPv6 multicast	12.3R2
IPv6 Neighbor Discovery Protocol (NDP)	12.3R2
Immediate System-to-Intermediate System (IS-IS)	12.3R2
ITU-T Y.1731 timestamping support (MX Series routers)	12.3R2

Flow monitoring and services:
• Active monitoring (multiple v9 j-flow templates)
• Active monitoring: cflowed v9 IPv6 templates
• Active Monitoring: cflowd V9 per-PFE sampling support
• Port mirroring for Layer 2 bridging traffic (family ethernet-switching)
  ◦ Port mirroring for Layer 2 VPLS traffic (family vpls)
  ◦ Port mirroring for Layer 2 VPN traffic over a circuit cross-connect (CCC)
  ◦ Virtual private wire service (VPWS)
  ◦ Flow monitoring on Multiservices DPCs
  ◦ Packet slice for port mirroring
  ◦ Inline Jflow monitoring (IPFIX)
	12.3R2

Labeled-switched-paths (LSPs) including accounting, policers, and filtering	12.3R2

Copyright © 2019, Juniper Networks, Inc.

Table 38: Protocols and Applications Supported by the MX Series MPC4E (continued)

Protocol or Application	First Supported Junos OS Release
Label Distribution Protocol (LDP)	12.3R2
Layer 2 features:	Release
• Integrated Routing and Bridging (IRB)	• 12.3R2
• Spanning Tree Protocols	• 12.3R2
• Link Layer Discovery Protocol (LLDP)	• 13.3R1 , 12.3R4
• Bridge Protocol Data Unit (BPDU) guard	• 12.3R2
• Bridge Protocol Data Unit (BPDU) loop guard	• 12.3R2
• Layer 2 Tunneling Protocol (L2TP)	• 12.3R2
• Trunk ports	• 13.3R1
• IEEE 802.1ad provider bridges	• 13.3R1
• Multi-chassis Link Aggregation Group (MC-LAG)—active/active and active/standby	• 13.3R1
• MC-LAG—active/active with IGMP snooping	• –
• MC-LAG VLAN –ccc interface encapsulation	• 13.3R1
• Layer 2 Protocol Tunneling (L2PT) support	• 13.3R1
• IGMP snooping with bridging, IRB, and VPLS	• 12.3R2
• *Layer 2 Learning and Forwarding in a Logical System Overview*	• 12.3R2
• Static Route Support	• 13.2R1
• 64 members in a link aggregation group	• 13.2R1
• Periodic packet management daemon (ppmd) and distributed PPMD for Link Aggregation Control Protocol process (LACPd)	
Layer 3 Features:	Release
• IPv6	• 12.3R2
• Protocol Independent Multicast Source-Specific Multicast (PIM SSM)	• 12.3R2
• Bidirectional Forwarding Detection (BFD)	• 12.3R2
• Any-source multicast (ASM) group override of source-specific multicast (SSM) range	• 12.3R2
• *Connectionless Network Service (CLNS)*	• 12.3R2
• Data Multicast Domain Tunnels (MDT) Subsequent Address Family Identifiers (SAFI)	• 12.3R2
• Draft-Rosen 7 Multicast VPNs	• 12.3R2
• Multicast over Integrated Routing and Bridging (IRB) interfaces	• 12.3R2
• Composite next hop with External and Internal BGP (EIBGP) paths	• 12.3R2
• VPN load balancing and IP header filtering of traffic across External and Internal BGP (EIBGP) paths	• 13.2R1
• Multiprotocol Label Switching (MPLS) over Generic Routing Encapsulation (GRE)	• 13.2R1
• *Multicast routing on Integrated Routing and Bridging (IRB) interfaces using logical tunnel interfaces systems with a Trio MPC/MIC module*	• 13.2R1
Link aggregation (IEEE 802.3ad)	12.3R2
Link Aggregation Control Protocol (LACP)	12.3R2
Link Layer Discovery Protocol (LLDP)	–

Table 38: Protocols and Applications Supported by the MX Series MPC4E (continued)

Protocol or Application	First Supported Junos OS Release
Local loopback	12.3R2
MAC learning, policing, accounting, and filtering	12.3R2
Mobile IP	–
Multiservices DPC (MS-DPC): • *Junos Address Aware Network Addressing Overview* • Intrusion Detection Service (IDS) • Graceful Routing Engine Switchover (GRES) for NAT • Intrusion Detection and Prevention (IDP) interoperability • IP Security (IPSec) detection • Two-Way Active Measurement Protocol (TWAMP) interoperability • Real-Time Performance Monitor (RPM) interoperabilitiy • GRE interoperability	13.2R1
Multi-chassis Link Aggregation (MC-LAG)	13.3R1
Multiple Tag Protocol Identifiers (TPIDs)	12.3R2
Multiprotocol Label Switching (MPLS): • Switching of pseudowire segments (multi-segment pseudowires with BGP-L2VPN) • LDP signaling for VPLS (LDP-VPLS) and MAC flush message processing (MAC-FLUSH-TLV) • RSVP graceful restart interoperability with Cisco using Nodal Hello • Failure action on BFD session down of RSVP LSPs • OSPF and IS-IS loop-free alternates (LFA) • 4/5 label MPLS operation • Virtual circuit connection verification (VCCV) BFD • Point-to-multipoint using the **enhanced-ip** command (support for NG-MVPN and P2MP load balancing over aggregated Ethernet) • MPLS-FRR bypass link protection • Load sharing across 64 ECMP next hops • MPLS-FRR VPLS instance prioritization • Five label stack on ingress • Generic Routing Encapsulation (GRE) keepalive messages • MPLS node protection, link protection, and statistics for static LSPs	12.3R2
mvrp	–
Multitopology routing (MTR)	–
Nonstop Active Routing (NSR)	12.3R2
Open Shortest Path First (OSPF)	12.3R2

Copyright © 2019, Juniper Networks, Inc.

Table 38: Protocols and Applications Supported by the MX Series MPC4E (continued)

Protocol or Application	First Supported Junos OS Release
Packet mirroring	12.3R2
Precision Time Protocol (PTP) (IEEE 1588)	15.1R1
IEEE 802.1ah provider backbone bridges (PBB)	–
Periodic Packet Management Process (PPMP) and Distributed PPMP	12.3R2
Push a tag on Ethernet VPLS and Ethernet CCC tag encapsulations	–
Remote Defect Indication (RDI)	12.3R2
Resource Reservation Protocol (RSVP)	12.3R2
Routing Information Protocol (RIP)	12.3R2
SNMP	12.3R2
Spanning Tree Protocols: • *IEEE 802.1s Multiple Spanning Tree Protocol (MSTP)* (part of IEEE 802.1Q VLANs) • *IEEE 802.1w Rapid Spanning Tree Protocol (RSTP)* • *IEEE 802.1D Spanning Tree Protocol (STP)* • Per-VLAN Spanning Tree (PVST) • Bridge Protocol Data Units (BPDUs) guard and loop guard • STP interprotocol action profiles and MAC flush (in VPLS multihoming, flush all MACs when there is a change in the STP interface state due to root protect)	12.3R2
Synchronous Ethernet (SyncE)	12.3 with SCBE and later
Two-Way Active Measurement Protocol (TWAMP)	13.2
Tunnel services • Clear DF-Bit (Don't Fragment Bit)	12.3R2
Type, Length, and Value (TLVs) support (IEEE 802.1ag)	–
Unnumbered Ethernet Interface	12.3R2
VLANs IEEE 802.1Q: • VLAN stacking and rewriting • Channels defined by two stacked VLAN tags • Flexible VLAN tagging • IP service for nonstandard TPID and stacked VLAN tags	12.3R2

Table 38: Protocols and Applications Supported by the MX Series MPC4E (continued)

Protocol or Application	First Supported Junos OS Release
Virtual Chassis (MX Series): • *Class of Service (CoS) Support for Virtual Ports* • Layer 2 support • DHCP Access Model and authentication, authorization, and accounting (AAA) services • Layer 3 Provider Edge (PE) router support • Dynamic Lawful Intercept (DLI) • *Layer 2 Access Node Control Protocol (ANCP)* • *Wireline Subscriber Management scaling to 64K subscribers* • Non-stop active routing (NSR) support for Layer 3 services • Local, Global, and VCCP Graceful Routing Engine Switchover (GRES) • SNMP trap generation when **vc-port** command fails • Virtual Chassis Port (VCP) masking • *Access to the Virtual Chassis Through the Management Interface*	13.2R1 (12.3R4 TRD)
Virtual Private LAN service (VPLS): • BGP multihoming for inter-AS VPLS • Gigabit Ethernet as core-facing interface • Configurable label block sizes • Hashing L3/L4 fields under Ethernet pseudowire for VPLS encapsulation, CCC encapsulation, and MPLS encapsulation • VPLS flood forwarding table filter (FTF), input FTF • Broadcast, unicast unknown, and multicast (BUM) traffic hashing over LAG • Configurable multichassis link aggregation (MC-LAG) interfaces to improve the Layer 2 and Layer 3 convergence time to subsecond values when a multichassis aggregated Ethernet link goes down or comes up in a bridge domain • *MAC Pinning to control MAC moves in a bridging environment and in VPLS networks*	12.3R2
Virtual private network (VPN): • *Multiprotocol Label Switching (MPLS)*	12.3R2
Virtual Router Redundancy Protocol (VRRP) for IPv4 • Scale VRRP using instance grouping • *Periodic Packet Management Process (PPMP) and Distributed Periodic Packet Management Process (PPMP)*	12.3R2
VPLS packet flooding to the right set of interfaces across mesh groups	12.3R2
WAN-PHY mode	12.3R2

Related Documentation

- 32x10GE MPC4E on page 119
- 2x100GE + 8x10GE MPC4E on page 120
- MICs Supported by MX Series Routers on page 18

 Copyright © 2019, Juniper Networks, Inc.

• MPCs Supported by MX240, MX480, MX960, MX2010, and MX2020 Routers on page 12

Protocols and Applications Supported by the MPC5E for MX Series Routers

Table 39 on page 311 contains the first Junos OS Release support for protocols and applications in the MPC5E installed on the MX240, MX480, MX960, MX2010, and MX2020 routers. The protocols and applications support feature parity with Junos OS Release 12.3.

A dash indicates that the protocol or application is not supported.

Table 39: Protocols and Applications Supported by the MX240, MX480, MX960, MX2010, and MX2020 MPC5E

Protocol or Application	First Supported Junos OS Release
Access Node Control Protocol (ANCP)	-
Accepts traffic destined for generic routing encapsulation (GRE) tunnels or Distance Vector Multicast Routing Protocol (DVMRP) (IP-in-IP) tunnels • *Dynamic* • *Manual*	13.3R3
Bidirectional Forwarding Detection protocol (BFD)	13.3R3
Border Gateway Protocol (BGP)	13.3R3
Bridge protocol data units (BPDUs)	13.3R3
BGP/*MPLS* virtual private networks (VPNs)	13.3R3
Class of service (CoS): • Maintain CoS across internal tunnel interfaces • Packet rewrites • Behavior aggregate (BA) classification • BA classification based on 802.1p of *payload* for core-facing VPLS interfaces • BA DSCP classification of MPLS packets for Layer 3 VPN/VPLS LSI and MPLS interfaces • Rate limit option for per-port queues • BA DSCP classification for VPLS/CCC family • Configurable .1p inheritance: push and swap from the hidden tag • Configurable shaping overhead for scheduling	13.3R3

Table 39: Protocols and Applications Supported by the MX240, MX480, MX960, MX2010, and MX2020 MPC5E (continued)

Protocol or Application	First Supported Junos OS Release
Class of service (CoS) per port: • Eight queues per port • Excess-rate and excess-priority configurations at the queue level • Shaping at the port level • Shaping at the queue level • Scheduling of queues based on the weighted round-robin (WRR) per excess-priority class • Round-robin scheduling of the queues per priority class • Weighted random early detection (WRED)	13.3R3
Class of service (CoS) per virtual LAN (VLAN): • Accounting, filtering, and policing • IEEE 802.1p rewrite • Classification • Tricolor marking	13.3R3
Class of service (CoS) per Point-to-Point Protocol over Ethernet (PPPoE) or Dynamic Host Configuration Protocol (DHCP) subscriber interfaces: • Accounting, filtering, and policing • IEEE 802.1p rewrite • Classification • Excess-rate and excess-priority configuration at the queue level • Tricolor marking • Shaping at the queue level • Scheduling of queues based on weighted round-robin (WRR) per priority class • Weighted random early detection (WRED)	13.3R3
Damping	15.1R2
Distributed Denial-of-Service (DDoS) Protection	13.3R3
DVMRP and GRE support—access side and server side	13.3R3
Ethernet Ring Protection Switching with multiple G.8032 instances	13.3R3
IEEE 802.1ag Ethernet OAM Continuity Check protocol	13.3R3
IEEE 802.1ag Ethernet OAM Linktrace protocol	13.3R3
IEEE 802.1ag Ethernet OAM Loopback protocol	13.3R3
IEEE 802.1ag Maintenance Association Intermediate Point (MIP) support, continuity check message (CCM), stacked VLAN tagging, trunk ports, support for VPLS/VPWS, VLAN circuit cross-connect (CCC) encapsulation and translational cross-connect (TCC) encapsulation	13.3R3

Copyright © 2019, Juniper Networks, Inc.

Table 39: Protocols and Applications Supported by the MX240, MX480, MX960, MX2010, and MX2020 MPC5E (continued)

Protocol or Application	First Supported Junos OS Release
Port Status TLV and Interface Status TLV	-
IEEE 802.3ah distributed periodic packet management (PPM) process, alarm indication signal (AIS), and remote defect indication (RDI)	13.3R3
Firewall filters and policers: • Policer support for aggregated Ethernet • Aggregate firewall-based policer for all families of a logical interface • Set forwarding class and loss priority for Routing Engine-generated packets by using a firewall • Physical interface policers, applying policers to the entire port • Lower policer limit from 32,000 to 8000 • Egress .1p MF and BA classification for VPLS • Differentiated Services Code Point (DSCP) rewrite for IPv4 and IPv6	13.3R3
Flexible Ethernet encapsulation	13.3R3
Flexible Queuing Mode NOTE: Flexible queuing mode is supported only on non-HQoS variants.	14.1R1
Graceful Routing Engine Switchover (GRES)	13.3R3
IGMPv3 support with snooping disabled	13.3R3
Ingress and egress hierarchical class-of-service (CoS) shaping and *hierarchical-scheduler*: • Group of virtual LANs (VLANs) level • VLAN level • Port level	13.3R3
Hierarchical CoS on generic routing encapsulation (GRE) tunnels	15.1R2
Inline active flow monitoring	13.3R3
Intelligent Oversubscription	13.3R3
Integrated routing and bridging (IRB)	13.3R3
Unified *In-service software upgrade (Unified ISSU)*	16.1R1
Interoperability with MPCs and existing DPCs	-
Interoperability with Multiservices DPCs	13.3R3
Interoperability with MX Series Flexible PIC Concentrators (MX-FPC)	13.3R3

Table 39: Protocols and Applications Supported by the MX240, MX480, MX960, MX2010, and MX2020 MPC5E (continued)

Protocol or Application	First Supported Junos OS Release
Interoperability with Juniper Networks 100-Gigabit Ethernet PIC	13.3R3
Interoperability with MX Series Application Services Modular Line Card (AS-MLC)	13.3R3
IPv4	13.3R3
IPv4 multicast	13.3R3
IPv6	13.3R3
IPv6 MLD	13.3R3
IPv6 multicast	13.3R3
IPv6 Neighbor Discovery	13.3R3
IS-IS	13.3R3
ITU-T Y.1731 timestamping support on MX Series routers	13.3R3
Flow monitoring and services: • Active monitoring (multiple version 8 j-flow templates) • Active monitoring (cflowed version 9 templates) • Port mirroring family VPLS, bridge CCC encapsulation (VPWS) • Packet slice for port mirroring • Flow monitoring on Multiservices DPCs • Inline active flow monitoring on MPC5E	Release • 13.3R3 • 13.3R3 • 13.3R3 • 13.3R3 • - • 13.3R3
Labeled-switched-paths (LSPs) including accounting, policers, and filtering	13.3R3
LDP	13.3R3
Layer 2 features: • Trunk ports • Layer 2 support for MX Series Virtual Chassis • Layer 2 and Layer 2.5, IRB, and Spanning Tree Protocols (xSTP) • IEEE 802.1ad provider bridges • Layer 2 protocol tunneling (L2PT) support • Layer 2 Tunneling Protocol (L2TP) • Multichassis LAG—active/active and active/standby • Multichassis LAG—active/active with IGMP snooping • Link aggregation group (LAG)—VLAN-CCC encapsulation • IGMP snooping with bridging, IRB, and VPLS	Release • 13.3R3 • 13.3R3 • - • 13.3R3 • 13.3R3 • 13.3R3 • 13.3R3 • 13.3R3 • 13.3R3 • 13.3R3

Copyright © 2019, Juniper Networks, Inc.

Table 39: Protocols and Applications Supported by the MX240, MX480, MX960, MX2010, and MX2020 MPC5E (continued)

Protocol or Application	First Supported Junos OS Release
Layer 2 VPN interfaces support VLAN ID list	13.3R3
Link aggregation (IEEE 802.3ad)	13.3R3
Link Aggregation Control Protocol (LACP)	13.3R3
Link Layer Discovery Protocol (LLDP)	13.3R3
Local loopback	13.3R3
MAC learning, policing, accounting, and filtering	13.3R3
Mobile IP	-
Multichassis link aggregation	-
Multiple Tag Protocol Identifiers (TPIDs)	13.3R3
MPLS: • Switching of pseudowire segments (multisegment pseudowires with BGP-L2VPN) • LDP signaling for VPLS (LDP-VPLS) and MAC flush message processing (MAC-FLUSH-TLV) • RSVP graceful restart interoperability with Cisco using Nodal Hello • Failure action on BFD session down of RSVP LSPs • OSPF and IS-IS loop-free alternates (LFA) • 4/5 label MPLS operation • Virtual circuit connectivity verification (VCCV) BFD • *Point to multipoint* using the **enhanced-ip** command (support for NG-MVPN and *point-to-multipoint* load balancing over aggregated Ethernet) • MPLS-FRR bypass link protection • Load sharing across 64 ECMP next hops • MPLS-FRR VPLS instance prioritization • Five label stack on ingress	13.3R3
MPLS node protection, link protection, and statistics for static LSPs	13.3R3
mvrp	-
Multitopology routing	-
Nonstop active routing (NSR)	13.3R3
OSPF	13.3R3
Packet mirroring	13.3R3

Table 39: Protocols and Applications Supported by the MX240, MX480, MX960, MX2010, and MX2020 MPC5E (continued)

Protocol or Application	First Supported Junos OS Release
Precision Time Protocol (PTP) (IEEE 1588)	14.2R2
IEEE 802.1ah provider backbone bridging (PBB)	-
Push a tag on Ethernet VPLS and Ethernet CCC tag encapsulations	13.3R3
RSVP	13.3R3
RIP	13.3R3
SNMP	13.3R3
Spanning Tree Protocols: • *IEEE 802.1s Multiple Spanning Tree Protocol (MSTP)* (part of IEEE 802.1Q VLANs) • *IEEE 802.1w Rapid Spanning Tree Protocol (RSTP)* • *IEEE 802.1D Spanning Tree Protocol (STP)* • Per-VLAN Spanning Tree (PVST) • Bridge protocol data units (BPDUs) guard and loop guard • STP inter-protocol action profiles and MAC flush	13.3R3
Subscriber management and services: (MX2010, MX2020: 12.3R4, 13.3R2, 13.3)	Release
• Aggregated Ethernet over static VLANs	• 13.3R3
• Aggregated Ethernet over dynamic VLANs	• 13.3R3
• *ANCP and the ANCP Agent Overview*	• 13.3R3
• DHCP access model	• 13.3R3
• Dynamic adjustment of shapers	• 13.3R3
• Dynamic PPPoE subscriber interface creation based on PPPoE service name tables	• 13.3R3
• Dynamic profiles	• 13.3R3
• Dynamic shaping, scheduling, and queuing	• 13.3R3
• Dynamic VLANs	• 13.3R3
• Enhanced subscriber management	• 15.1R4
• Static and dynamic PPPoE subscriber interfaces	• 13.3R3
Synchronous Ethernet	13.3R3
Two-Way Active Measurement Protocol (TWAMP)	13.3R3
Tunnel services • Clear DF-Bit (Don't Fragment Bit)	13.3R3
Unnumbered Ethernet Interface	13.3R3

Copyright © 2019, Juniper Networks, Inc.

Table 39: Protocols and Applications Supported by the MX240, MX480, MX960, MX2010, and MX2020 MPC5E (continued)

Protocol or Application	First Supported Junos OS Release
VLANs IEEE 802.1Q: • VLAN stacking and rewriting • Channels defined by two stacked VLAN tags • Flexible VLAN tagging • IP service for nonstandard TPID and stacked VLAN tags	13.3R3
Virtual Chassis: MPLS IPv4 and IPv6, unicast, multicast forwarding, VPLS, NSR for Layer 3/MPLS services	13.3R3
Virtual private LAN service (VPLS): • BGP multihoming for inter-AS VPLS • Gigabit Ethernet as core-facing interface • Configurable label block sizes • Hashing L3/L4 fields under Ethernet pseudowire for VPLS encapsulation, CCC encapsulation, and MPLS encapsulation • VPLS flood forwarding table filter (FTF), input FTF • Broadcast, unicast unknown, and multicast traffic hashing over LAG	13.3R3
Virtual private network (VPN)	13.3R3
Virtual Router Redundancy Protocol (VRRP) for IPv4	13.3R3
VPLS packet flooding to the right set of interfaces across mesh groups	13.3R3
WAN-PHY mode	13.3R3

Related Documentation

- 6x40GE + 24x10GE MPC5E on page 122
- 6x40GE + 24x10GE MPC5EQ on page 124
- MICs Supported by MX Series Routers on page 18

Protocols and Applications Supported by the MPC6E for MX2000 Routers

Table 40 on page 318 contains the first Junos OS Release support for protocols and applications on the MX2010 and MX2020 MPC6E. The protocols and applications support feature parity with Junos OS Release 13.3.

A dash indicates that the protocol or application is not supported.

Table 40: Protocols and Applications Supported by the MX2010 and MX2020 MPC6E

Protocol or Application	First Supported Junos OS Release
Access Node Control Protocol (ANCP)	-
Accepts traffic destined for generic routing encapsulation (GRE) tunnels or Distance Vector Multicast Routing Protocol (DVMRP) (IP-in-IP) tunnels • *Dynamic* • *Manual*	13.3R3
Bidirectional Forwarding Detection protocol (BFD)	13.3R3
Border Gateway Protocol (BGP)	13.3R3
Bridge protocol data units (BPDUs)	13.3R3
BGP/*MPLS* virtual private networks (VPNs)	13.3R3
Class of service (CoS): • Maintain CoS across internal tunnel interfaces • Packet rewrites • Behavior aggregate (BA) classification • BA classification based on 802.1p of *payload* for core-facing VPLS interfaces • BA DSCP classification of MPLS packets for L3VPN/VPLS LSI and MPLS interfaces • Rate limit option for per-port queues • BA DSCP classification for VPLS/CCC family • Configurable .1p inheritance: push and swap from the hidden tag • Configurable shaping overhead for scheduling	13.3R3
Class of service (CoS) per port: • Eight queues per port • Excess-rate and excess-priority configurations at the queue level • Shaping at the port level • Shaping at the queue level • Scheduling of queues based on the weighted round-robin (WRR) per excess-priority class • Round-robin scheduling of the queues per priority class • Weighted random early detection (WRED)	13.3R2
Class of service (CoS) per virtual LAN (VLAN): • Accounting, filtering, and policing • IEEE 802.1p rewrite • Classification • Tricolor marking	13.3R3

Copyright © 2019, Juniper Networks, Inc.

Table 40: Protocols and Applications Supported by the MX2010 and MX2020 MPC6E (continued)

Protocol or Application	First Supported Junos OS Release
Class of service (CoS) per Point-to-Point Protocol over Ethernet (PPPoE) or Dynamic Host Configuration Protocol (DHCP) subscriber interfaces: • Accounting, filtering, and policing • IEEE 802.1p rewrite • Classification • Excess-rate and excess-priority configuration at the queue level • Tricolor marking • Shaping at the queue level • Scheduling of queues based on weighted round-robin (WRR) per priority class • Weighted random early detection (WRED)	13.3R3
Damping	15.1R2
Distributed Denial-of-Service (DDoS) Protection	13.3R3
DVMRP and GRE support—access side and server side	13.3R3
Ethernet Ring Protection Switching with multiple G.8032 instances	13.3R3
IEEE 802.1ag Ethernet OAM Continuity Check protocol	13.3R3
IEEE 802.1ag Ethernet OAM Linktrace protocol	13.3R3
IEEE 802.1ag Ethernet OAM Loopback protocol	13.3R3
IEEE 802.1ag Maintenance Association Intermediate Point (MIP) support, continuity check message (CCM), stacked VLAN tagging, trunk ports, support for VPLS/VPWS, VLAN circuit cross-connect (CCC) encapsulation and translational cross-connect (TCC) encapsulation	13.3R3
IEEE 802.1ag optional type, length, and value (TLV) (*Port Status TLV and Interface Status TLV*)	-
IEEE 802.3ah distributed periodic packet management (PPM) process, alarm indication signal (AIS), and remote defect indication (RDI)	13.3R3
Firewall filters and policers: • Policer support for aggregated Ethernet • Aggregate firewall-based policer for all families of a logical interface • Set forwarding class and loss priority for Routing Engine-generated packets by using a firewall • Physical interface policers, applying policers to the entire port • Lower policer limit from 32,000 to 8000 • Egress .1p MF and BA classification for VPLS • Differentiated Services Code Point (DSCP) rewrite for IPv4 and IPv6	13.3R3

Table 40: Protocols and Applications Supported by the MX2010 and MX2020 MPC6E (continued)

Protocol or Application	First Supported Junos OS Release
Flexible Ethernet encapsulation	13.3R3
Graceful Routing Engine Switchover (GRES)	13.3R3
IGMPv3 support with snooping disabled	13.3R3
Ingress and egress hierarchical class-of-service (CoS) shaping and *hierarchical-scheduler*: • Group of virtual LANs (VLANs) level • VLAN level • Port level	13.3R3
Inline active flow monitoring	13.3R3
Intelligent oversubscription on MIC and MPC interfaces	13.3R3
Integrated routing and bridging (IRB)	13.3R3
Unified *In-service software upgrade (Unified ISSU)*	16.1R1
Interoperability with MPCs and existing DPCs	13.3R3
Interoperability with Multiservices DPCs	13.3R3
Interoperability with MX Series Flexible PIC Concentrators (MX-FPC)	13.3R3
IPv4	13.3R3
IPv4 multicast	13.3R3
IPv6	13.3R3
IPv6 MLD	13.3R3
IPv6 multicast	13.3R3
IPv6 neighbor discovery	13.3R3
IS-IS	13.3R3
ITU-T Y.1731 timestamping support on MX Series routers	13.3R3

Copyright © 2019, Juniper Networks, Inc.

Table 40: Protocols and Applications Supported by the MX2010 and MX2020 MPC6E (continued)

Protocol or Application	First Supported Junos OS Release
Flow monitoring and services: • Active monitoring (multiple v8 version j-flow templates) • Active monitoring (cflowed version 9 templates) • Port mirroring family VPLS, bridge CCC encapsulation (VPWS) • Packet slice for port mirroring • Flow monitoring on Multiservices DPCs • Inline active flow monitoring on MPC5E	Release • 13.3R3 • 13.3R3 • 13.3R3 • 13.3R3 • - • 13.3R3
Labeled-switched-paths (LSPs) including accounting, policers, and filtering	13.3R3
LDP	13.3R3
Layer 2 features: • Trunk ports • Layer 2 support for MX Series Virtual Chassis • Layer 2 and Layer 2.5, IRB and Spanning Tree Protocols (xSTP) • IEEE 802.1ad provider bridges • Layer 2 protocol tunneling (L2PT) support • Layer 2 Tunneling Protocol (L2TP) • Multichassis LAG—active/active and active/standby • Multichassis LAG—active/active with IGMP snooping • Link aggregation group (LAG)—VLAN-CCC encapsulation • IGMP snooping with bridging, IRB, and VPLS	Release • 13.3R3 • 13.3R3 • 15.1R2 • 13.3R3 • 13.3R3 • 13.3R3 • 13.3R3 • 13.3R3 • 15.1R2 • 13.3R2
Layer 2 VPN interfaces	
Link aggregation (IEEE 802.3ad)	13.3R3
Link Aggregation Control Protocol (LACP)	13.3R3
Link Layer Discovery Protocol (LLDP)	-
Local loopback	13.3R3
MAC learning, policing, accounting, and filtering	13.3R3
Mobile IP	-
Multichassis link aggregation	-
Multiple Tag Protocol Identifiers (TPIDs)	13.3R3

Table 40: Protocols and Applications Supported by the MX2010 and MX2020 MPC6E (continued)

Protocol or Application	First Supported Junos OS Release
MPLS: • Switching of pseudowire segments (multisegment pseudowires with BGP-L2VPN) • LDP signaling for VPLS (LDP-VPLS) and MAC flush message processing (MAC-FLUSH-TLV) • RSVP graceful restart interoperability with Cisco using Nodal Hello • Failure action on BFD session down of RSVP LSPs • OSPF and IS-IS loop-free alternates (LFA) • 4/5 label MPLS operation • Virtual circuit connectivity verification (VCCV) BFD • Point to multipoint using the **enhanced-ip** command (support for NG-MVPN and P2MP load balancing over aggregated Ethernet) • MPLS-FRR bypass link protection • Load sharing across 64 ECMP next hops • MPLS-FRR VPLS instance prioritization • Five label stack on ingress	13.3R3
MPLS node protection, link protection, and statistics for static LSPs	13.3R3
mvrp	-
Multitopology routing	-
Nonstop active routing (NSR)	-
OSPF	13.3R3
Packet mirroring	13.3R3
Precision Time Protocol (PTP) (IEEE 1588)	-
IEEE 802.1ah provider backbone bridging (PBB)	-
Push a tag on Ethernet VPLS and Ethernet CCC tag encapsulations	13.3R3
RSVP	13.3R3
RIP	13.3R3
SNMP	13.3R3

Copyright © 2019, Juniper Networks, Inc.

Table 40: Protocols and Applications Supported by the MX2010 and MX2020 MPC6E (continued)

Protocol or Application	First Supported Junos OS Release
Spanning Tree Protocols: • *IEEE 802.1s Multiple Spanning Tree Protocol (MSTP)* (part of IEEE 802.1Q VLANs) • *IEEE 802.1w Rapid Spanning Tree Protocol (RSTP)* • *IEEE 802.1D Spanning Tree Protocol (STP)* • Per-VLAN Spanning Tree (PVST) • Bridge protocol data units (BPDUs) guard and loop guard • STP inter-protocol action profiles and MAC flush	13.3R3
Subscriber management and services(MX2010, MX2020: 12.3R4, 13.3R2, 13.3): • Aggregated Ethernet over static VLANs • Aggregated Ethernet over dynamic VLANs • *ANCP and the ANCP Agent Overview* • DHCP access model • Dynamic adjustment of shapers • Dynamic PPPoE subscriber interface creation based on PPPoE service name tables • Dynamic profiles • Dynamic shaping, scheduling, and queuing • Dynamic VLANs • Enhanced subscriber management (uplink services) • Static and dynamic PPPoE subscriber interfaces	Release • 13,3R3 • 13.3R3 • 13.3R3 • 13.3R3 • 13.3R3 • 13.3R3 • 13.3R3 • 13.3R3 • 13.3R3 • 15.1R4 • 13.3R3
Synchronous Ethernet	13.3R3
Two-Way Active Measurement Protocol (TWAMP)	13.3R3
Tunnel services	13.3R3
Unnumbered Ethernet Interface	13.3R3
VLANs IEEE 802.1Q: • VLAN stacking and rewriting • Channels defined by two stacked VLAN tags • Flexible VLAN tagging • IP service for nonstandard TPID and stacked VLAN tags	13.3R3
Virtual private LAN service (VPLS): • BGP multihoming for inter-AS VPLS • Gigabit Ethernet as core-facing interface • Configurable label block sizes • Hashing L3/L4 fields under Ethernet pseudowire for VPLS encapsulation, CCC encapsulation, and MPLS encapsulation • VPLS flood forwarding table filter (FTF), input FTF • Broadcast, unknown unicast, and multicast traffic hashing over LAG	13.3R3

Table 40: Protocols and Applications Supported by the MX2010 and MX2020 MPC6E (continued)

Protocol or Application	First Supported Junos OS Release
Virtual private network (VPN)	13.3R3
Virtual Router Redundancy Protocol (VRRP) for IPv4	13.3R3
VPLS packet flooding to the right set of interfaces across mesh groups	13.3R3
WAN-PHY mode	13.3R3

Related Documentation

- MPC6E on page 129
- MICs Supported by MX Series Routers on page 18

Protocols and Applications Supported by the MPC7E for MX Series Routers

Table 37 on page 296 contains the first Junos OS Release support for protocols and applications on the MX240, MX480, MX960, MX2010, and MX2020 MPC7Es (“MPC7E 10G” on page 132 and “MPC7E (Multi-Rate)” on page 130). The protocols and applications support feature parity with Junos OS Release 15.1R1.

A dash indicates that the protocol or application is not supported.

Table 41: Protocols and Applications Supported by MPC7Es in the MX240, MX480, MX960, MX2010, and MX2020 Routers

Protocol or Application	First Supported Junos OS Release for MPC7E-MRATE	First Supported Junos OS Release for MPC7E-10G
Access Node Control Protocol (ANCP)	-	-
Accepts traffic destined for generic routing encapsulation (GRE) tunnels or Distance Vector Multicast Routing Protocol (DVMRP) (IP-in-IP) tunnels • *Dynamic* • *Manual*	15.1F4	15.1F5
Bidirectional Forwarding Detection protocol (BFD)	15.1F4	15.1F5
Border Gateway Protocol (BGP)	15.1F4	15.1F5
Bridge protocol data units (BPDUs)	15.1F4	15.1F5
BGP/*MPLS* virtual private networks (VPNs)	15.1F4	15.1F5

Copyright © 2019, Juniper Networks, Inc.

Table 41: Protocols and Applications Supported by MPC7Es in the MX240, MX480, MX960, MX2010, and MX2020 Routers (continued)

Protocol or Application	First Supported Junos OS Release for MPC7E-MRATE	First Supported Junos OS Release for MPC7E-10G
Class of service (CoS): • Maintain CoS across internal tunnel interfaces • Packet rewrites • Behavior aggregate (BA) classification • BA classification based on 802.1p of payload for core-facing VPLS interfaces • BA DSCP classification of MPLS packets for L3VPN/VPLS LSI and MPLS interfaces • Rate limit option for per-port queues • BA DSCP classification for VPLS/CCC family • Configurable .1p inheritance: push and swap from the hidden tag • Configurable shaping overhead for scheduling	15.1F4	15.1F5
Class of service (CoS) per port: • Eight queues per port • Excess-rate and excess-priority configurations at the queue level • Shaping at the port level • Shaping at the queue level • Scheduling of queues based on the weighted round-robin (WRR) per excess-priority class • Round-robin scheduling of the queues per priority class • Weighted random early detection (WRED)	15.1F4 NOTE: MPC7E-MRATE MPC supports 5 guaranteed and 4 excess priorities.	15.1F5 NOTE: MPC7E-10G MPC supports 5 guaranteed and 4 excess priorities.
Class of service (CoS) per virtual LAN (VLAN): • Accounting, filtering, and policing • IEEE 802.1p rewrite • Classification • Tricolor marking	15.1F4	15.1F5

Table 41: Protocols and Applications Supported by MPC7Es in the MX240, MX480, MX960, MX2010, and MX2020 Routers (continued)

Protocol or Application	First Supported Junos OS Release for MPC7E-MRATE	First Supported Junos OS Release for MPC7E-10G
Class of service (CoS) per Point-to-Point Protocol over Ethernet (PPPoE) or Dynamic Host Configuration Protocol (DHCP) subscriber interfaces: • Accounting, filtering, and policing • IEEE 802.1p rewrite • Classification • Excess-rate and excess-priority configuration at the queue level • Tricolor marking • Shaping at the queue level • Scheduling of queues based on weighted round-robin (WRR) per priority class • Weighted random early detection (WRED)	-	-
Distributed Denial-of-Service (DDoS) Protection	15.1F4	15.1F5
DVMRP and GRE support—access side and server side	15.1F4	15.1F5
Dynamic Power Management	15.1F4	15.1F5
Ethernet Ring Protection Switching with multiple G.8032 instances	15.1F4	15.1F5
Flexible Queuing Mode	15.1F4	15.1F5
IEEE 802.1ag Ethernet OAM Continuity Check protocol	15.1F4	15.1F5
IEEE 802.1ag Ethernet OAM Linktrace protocol	15.1F4	15.1F5
IEEE 802.1ag Ethernet OAM Loopback protocol	15.1F4	15.1F5
IEEE 802.1ag maintenance association intermediate point (MIP) support, continuity check message (CCM), stacked VLAN tagging, trunk ports, support for VPLS/VPWS, VLAN circuit cross-connect (CCC) encapsulation and translational cross-connect (TCC) encapsulation	15.1F4	15.1F5

Copyright © 2019, Juniper Networks, Inc.

Table 41: Protocols and Applications Supported by MPC7Es in the MX240, MX480, MX960, MX2010, and MX2020 Routers (continued)

Protocol or Application	First Supported Junos OS Release for MPC7E-MRATE	First Supported Junos OS Release for MPC7E-10G
IEEE 802.1ag optional type, length, and value (TLVs) support *Port Status TLV and Interface Status TLV*	15.1F4	15.1F5
IEEE 802.3ah distributed periodic packet management (PPM) process , alarm indication signal (AIS), and remote defect indication (RDI)	15.1F4	15.1F5
Firewall filters and policers: • Policer support for aggregated Ethernet • Aggregate firewall-based policer for all families of a logical interface • Intelligent hierarchial policers • Set forwarding class and loss priority for Routing Engine-generated packets by using a firewall • Physical interface policers, applying policers to the entire port • Lower policer limit from 32K to 8K • Egress .1p MF and BA classification for VPLS • Differentiated Services Code Point (DSCP) rewrite for IPv4 and IPv6	15.1F4 NOTE: Layer 2 overhead adjustment (packet length used for the policer included in the Layer 2 header) is not supported in 15.1F4.	15.1F5 NOTE: Layer 2 overhead adjustment (packet length used for the policer included in the Layer 2 header) is not supported in 15.1F5.
Flexible Ethernet encapsulation	15.1F4	15.1F5
Graceful Routing Engine Switchover (GRES)	15.1F4	15.1F5
IGMPv3 support with snooping disabled	15.1F4	15.1F5
Ingress and egress hierarchical class-of-service (CoS) shaping and *hierarchical-scheduler*: • Group of virtual LANs (VLANs) level • VLAN level • Port level	15.1F4	15.1F5
Inline flow monitoring	15.1F4	15.1F5
Intelligent Oversubscription on MIC and MPC Interfaces Overview	15.1F4	15.1F5
Integrated routing and bridging (IRB)	15.1F4	15.1F5

Table 41: Protocols and Applications Supported by MPC7Es in the MX240, MX480, MX960, MX2010, and MX2020 Routers (continued)

Protocol or Application	First Supported Junos OS Release for MPC7E-MRATE	First Supported Junos OS Release for MPC7E-10G
Unified *In-service software upgrade (Unified ISSU)*	17.4R1	17.4R1
Interoperability with MPCs	15.1F4	15.1F5
Interoperability with MS-DPCs	-	-
Interoperability with MX Series Flexible PIC Concentrators (MX-FPC)	-	-
IPv4	15.1F4	15.1F5
IPv4 multicast	15.1F4	15.1F5
IPv6	15.1F4	15.1F5
IPv6 MLD	15.1F4	15.1F5
IPv6 multicast	15.1F4	15.1F5
IPv6 Neighbor Discovery	15.1F4	15.1F5
IS-IS	15.1F4	15.1F5
ITU-T Y.1731 timestamping support on MX Series routers	15.1F4	15.1F5
Flow monitoring and services	First Supported Junos OS Release for MPC7E-MRATE	First Supported Junos OS Release for MPC7E-10G
Inline IP Flow Information Export (IPFIX)	15.1F4	15.1F5
Active monitoring	15.1F4	15.1F5
Port mirroring family VPLS, bridge CCC encapsulation (VPWS)	15.1F4	15.1F5
Packet slice for port mirroring	15.1F4	15.1F5
Flow monitoring on MS-MPCs	17.3R1	17.3R1
Inline flow monitoring	15.1F4	15.1F5
Labeled-switched-paths (LSPs) including accounting, policers, and filtering	15.1F4	15.1F5

Copyright © 2019, Juniper Networks, Inc.

Table 41: Protocols and Applications Supported by MPC7Es in the MX240, MX480, MX960, MX2010, and MX2020 Routers (continued)

Protocol or Application	First Supported Junos OS Release for MPC7E-MRATE	First Supported Junos OS Release for MPC7E-10G
LDP	15.1F4	15.1F5

Layer 2 Features	First Supported Junos OS Release for MPC7E-MRATE	First Supported Junos OS Release for MPC7E-10G
Trunk ports	15.1F4	15.1F5
Layer 2 support for MX Series Virtual Chassis	17.3R1	17.3R1
Layer 2 and Layer 2.5, IRB and Spanning Tree Protocols (xSTP)	15.1F4	15.1F5
IEEE 802.1ad provider bridges	15.1F4	15.1F5
Layer 2 protocol tunneling (L2PT) support	15.1F4	15.1F5
Layer 2 Tunneling Protocol (L2TP)	15.1F4	15.1F5
Multichassis LAG—active/active and active/standby	15.1F4	15.1F5
Multichassis LAG—active/active with IGMP snooping	15.1F4	15.1F5
Link aggregation group (LAG)—VLAN-CCC encapsulation	15.1F4	15.1F5
IGMP snooping with bridging, IRB, and VPLS	15.1F4	15.1F5

Layer 2 VPN interfaces support VLAN ID list	15.1F4	15.1F5
Link aggregation (IEEE 802.3ad)	15.1F4	15.1F5
Link Aggregation Control Protocol (LACP)	15.1F4	15.1F5
Link Layer Discovery Protocol (LLDP)	15.1F4	15.1F5
Local loopback	15.1F4	15.1F5

Copyright © 2019, Juniper Networks, Inc.

Table 41: Protocols and Applications Supported by MPC7Es in the MX240, MX480, MX960, MX2010, and MX2020 Routers (continued)

Protocol or Application	First Supported Junos OS Release for MPC7E-MRATE	First Supported Junos OS Release for MPC7E-10G
MAC learning, policing, accounting, and filtering	15.1F4	15.1F5
MACSec	First Supported Junos OS Release for MPC7E-MRATE	First Supported Junos OS Release for MPC7E-10G
GCM-AES-128 MACSec Encryption, 802.1AE-2006	-	16.1R1
GCM-AES-256 MACSec Encryption, 802.1AEbn-2011	-	16.2R1
Mobile IP	-	-
Multichassis link aggregation	15.1F4	15.1F5
Multiple Tag Protocol Identifiers (TPIDs)	15.1F4	15.1F5
MPLS: • Switching of pseudowire segments (multisegment pseudowires with BGP-L2VPN) • LDP signaling for VPLS (LDP-VPLS) and MAC flush message processing (MAC-FLUSH-TLV) • RSVP graceful restart interoperability with Cisco using Nodal Hello • Failure action on BFD session down of RSVP LSPs • OSPF and IS-IS loop-free alternates (LFA) • 4/5 label MPLS operation • Virtual circuit connectivity verification (VCCV) BFD • Point to multipoint using the enhanced-ip command (support for NG-MVPN and P2MP load balancing over aggregated Ethernet) • MPLS-FRR bypass link protection • Load sharing across 64 ECMP next hops • MPLS-FRR VPLS instance prioritization • Five label stack on ingress	15.1F4	15.1F5
MPLS node protection, link protection, and statistics for static LSPs	15.1F4	15.1F5

Copyright © 2019, Juniper Networks, Inc.

Table 41: Protocols and Applications Supported by MPC7Es in the MX240, MX480, MX960, MX2010, and MX2020 Routers (continued)

Protocol or Application	First Supported Junos OS Release for MPC7E-MRATE	First Supported Junos OS Release for MPC7E-10G
mvrp	15.1F4	15.1F5
Multitopology routing	15.1F4	15.1F5
Nonstop active routing (NSR)	15.1F4	15.1F5
OSPF	15.1F4	15.1F5
Packet mirroring	15.1F4	15.1F5
Precision Time Protocol (PTP) (IEEE 1588)	17.4R1	17.4R1
IEEE 802.1ah provider backbone bridging (PBB)	-	-
Push a tag on Ethernet VPLS and Ethernet CCC tag encapsulations	15.1F4	15.1F5
RSVP	15.1F4	15.1F5
RIP	15.1F4	15.1F5
SNMP	15.1F4	15.1F5
Spanning Tree Protocols: • *IEEE 802.1s Multiple Spanning Tree Protocol (MSTP)* (part of IEEE 802.1Q VLANs) • *IEEE 802.1w Rapid Spanning Tree Protocol (RSTP)* • *IEEE 802.1D Spanning Tree Protocol (STP)* • Per-VLAN Spanning Tree (PVST) • Bridge protocol data units (BPDUs) guard and loop guard • STP inter-protocol action profiles and MAC flush (in VPLS multi-homing, flush all MACs when there is a change in the STP interface state due to root protect)	15.1F4	15.1F5
Subscriber management and services: • Enhanced subscriber management	16.1R4; 17.1R1	16.1R4; 17.1R1
Synchronous Ethernet	16.1R1	16.1R1

Table 41: Protocols and Applications Supported by MPC7Es in the MX240, MX480, MX960, MX2010, and MX2020 Routers (continued)

Protocol or Application	First Supported Junos OS Release for MPC7E-MRATE	First Supported Junos OS Release for MPC7E-10G
Two-Way Active Measurement Protocol (TWAMP)	16.1R4 NOTE: TWAMP is not supported on the MX2020 and MX2010 chassis.	16.1R4 NOTE: TWAMP is not supported on the MX2020 and MX2010 chassis.
Tunnel services • Clear DF-Bit (Don't Fragment Bit)	15.1F4	15.1F5
Unified in-service software upgrade (ISSU)	-	-
Unnumbered Ethernet Interface	15.1F4	15.1F5
VLANs IEEE 802.1Q: • VLAN stacking and rewriting • Flexible VLAN tagging • IP service for nonstandard TPID and stacked VLAN tags	15.1F4	15.1F5
Virtual Chassis: MPLS IPv4 and IPv6, unicast, multicast forwarding, VPLS, NSR for Layer 3/MPLS services	17.3R1	17.3R1
Virtual private LAN service (VPLS): • BGP multihoming for inter-AS VPLS • Gigabit Ethernet as core-facing interface • Configurable label block sizes • Hashing L3/L4 fields under Ethernet pseudowire for VPLS encapsulation, CCC encapsulation, and MPLS encapsulation • VPLS flood forwarding table filter (FTF), input FTF • Broadcast, unicast unknown, and multicast (BUM) traffic hashing over LAG	15.1F4	15.1F5
Virtual private network (VPN)	15.1F4	15.1F5
Virtual Router Redundancy Protocol (VRRP) for IPv4	15.1F4	15.1F5
VPLS packet flooding to the right set of interfaces across mesh groups	15.1F4	15.1F5

Copyright © 2019, Juniper Networks, Inc.

Table 41: Protocols and Applications Supported by MPC7Es in the MX240, MX480, MX960, MX2010, and MX2020 Routers (continued)

Protocol or Application	First Supported Junos OS Release for MPC7E-MRATE	First Supported Junos OS Release for MPC7E-10G
WAN-PHY mode	-	-

Related Documentation

- MPC7E (Multi-Rate) on page 130
- MPC7E 10G on page 132

Protocols and Applications Supported by the MPC8E and MPC9E on the MX2010 and MX2020 Routers

Table 37 on page 296 lists the protocols and applications supported by MPC8E and MPC9E on the MX2010 and MX2020 routers.

An en dash indicates that the protocol or application is not supported.

Table 42: Protocols and Applications Supported by MPC8E and MPC9E on the MX2010 and MX2020 Routers

Protocol or Application	First Supported Junos OS Release	
	MPC8E	MPC9E
Access Node Control Protocol (ANCP)	-	-
Accepts traffic destined for generic routing encapsulation (GRE) tunnels or Distance Vector Multicast Routing Protocol (DVMRP) (IP-in-IP) tunnels • *Dynamic* • *Manual*	15.1F5	15.1F5
Bidirectional Forwarding Detection protocol (BFD)	15.1F5	15.1F5
Border Gateway Protocol (BGP)	15.1F5	15.1F5
Bridge protocol data units (BPDUs)	15.1F5	15.1F5
BGP/*MPLS* virtual private networks (VPNs)	15.1F5	15.1F5

Copyright © 2019, Juniper Networks, Inc.

Table 42: Protocols and Applications Supported by MPC8E and MPC9E on the MX2010 and MX2020 Routers (continued)

Protocol or Application	First Supported Junos OS Release	
	MPC8E	MPC9E
Class of service (CoS): • Maintain CoS across internal tunnel interfaces • Packet rewrites • Behavior aggregate (BA) classification • BA classification based on 802.1p of payload for core-facing VPLS interfaces • BA DSCP classification of MPLS packets for L3VPN/VPLS LSI and MPLS interfaces • Rate-limit option for per-port queues • BA DSCP classification for VPLS/CCC family • Configurable .1p inheritance: push and swap from the hidden tag • Configurable shaping overhead for scheduling	15.1F5	15.1F5
Class of service (CoS) per port: • Eight queues per port • Excess-rate and excess-priority configurations at the queue level • Shaping at the port level • Shaping at the queue level • Scheduling of queues based on the weighted round-robin (WRR) per excess-priority class • Round-robin scheduling of the queues per priority class • Weighted random early detection (WRED)	15.1F5	15.1F5
Class of service (CoS) per virtual LAN (VLAN): • Accounting, filtering, and policing • IEEE 802.1p rewrite • Classification • Tricolor marking	15.1F5	15.1F5
Class of service (CoS) per Point-to-Point Protocol over Ethernet (PPPoE) or Dynamic Host Configuration Protocol (DHCP) subscriber interfaces: • Accounting, filtering, and policing • IEEE 802.1p rewrite • Classification • Excess-rate and excess-priority configuration at the queue level • Tricolor marking • Shaping at the queue level • Scheduling of queues based on weighted round-robin (WRR) per priority class • Weighted random early detection (WRED)	-	-
Damping	16.1R1	16.1R1

Copyright © 2019, Juniper Networks, Inc.

Table 42: Protocols and Applications Supported by MPC8E and MPC9E on the MX2010 and MX2020 Routers (continued)

Protocol or Application	First Supported Junos OS Release	
	MPC8E	MPC9E
Distributed Denial-of-Service (DDoS) Protection	15.1F5	15.1F5
DVMRP and GRE support—access side and server side	15.1F5	15.1F5
Dynamic Power Management	15.1F5	15.1F5
Ethernet Ring Protection Switching with multiple G.8032 instances	15.1F5	15.1F5
Flexible Queuing Mode	15.1F5	15.1F5
IEEE 802.1ag Ethernet OAM Continuity Check protocol	15.1F5	15.1F5
IEEE 802.1ag Ethernet OAM Linktrace protocol	15.1F5	15.1F5
IEEE 802.1ag Ethernet OAM Loopback protocol	15.1F5	15.1F5
IEEE 802.1ag maintenance association intermediate point (MIP) support, continuity check message (CCM), stacked VLAN tagging, trunk ports, support for VPLS/VPWS, VLAN circuit cross-connect (CCC) encapsulation and translational cross-connect (TCC) encapsulation	15.1F5	15.1F5
IEEE 802.1ag optional type, length, and value (TLVs) support *Port Status TLV and Interface Status TLV*	15.1F5	15.1F5
IEEE 802.3ah distributed periodic packet management (PPM) process, alarm indication signal (AIS), and remote defect indication (RDI)	15.1F5	15.1F5
Firewall filters and policers: • Policer support for aggregated Ethernet • Aggregate firewall-based policer for all families of a logical interface • Intelligent hierarchical policers • Set forwarding class and loss priority for Routing Engine-generated packets by using a firewall • Physical interface policers, applying policers to the entire port • Lower policer limit from 32,000 to 8000 • Egress .1p MF and BA classification for VPLS • Differentiated Services Code Point (DSCP) rewrite for IPv4 and IPv6	15.1F5	15.1F5
Flexible Ethernet encapsulation	15.1F5	15.1F5
Graceful Routing Engine Switchover (GRES)	15.1F5	15.1F5
IGMPv3 support with snooping disabled	15.1F5	15.1F5

Table 42: Protocols and Applications Supported by MPC8E and MPC9E on the MX2010 and MX2020 Routers (continued)

Protocol or Application	First Supported Junos OS Release	
	MPC8E	MPC9E
Ingress and egress hierarchical class-of-service (CoS) shaping and *hierarchical-scheduler*: • Set of Interfaces • VLAN level • Port level	15.1F5	15.1F5
Inline flow monitoring	15.1F5	15.1F5
Intelligent Oversubscription	15.1F5	15.1F5
Integrated routing and bridging (IRB)	15.1F5	15.1F5
Unified *In-service software upgrade (Unified ISSU)*	17.4R1	17.4R1
Interoperability with existing MPCs	15.1F5	15.1F5
IPv4	15.1F5	15.1F5
IPv4 multicast	15.1F5	15.1F5
IPv6	15.1F5	15.1F5
IPv6 MLD	15.1F5	15.1F5
IPv6 multicast	15.1F5	15.1F5
IPv6 Neighbor Discovery	15.1F5	15.1F5
IS-IS	15.1F5	15.1F5
ITU-T Y.1731 timestamping support on MX Series routers	15.1F5	15.1F5
Flow monitoring and services: • Active monitoring (cflowed version 9 templates) • Port mirroring family VPLS, bridge CCC encapsulation (VPWS) • Packet slice for port mirroring • Flow monitoring on MS-DPCs • Inline flow monitoring on MPC8E and MPC9E	**Release** • 15.1F5 • 15.1F5 • 15.1F5 • - • 15.1F5	**Release** • 15.1F5 • 15.1F5 • 15.1F5 • - • 15.1F5
Labeled-switched-paths (LSPs) including accounting, policers, and filtering	15.1F5	15.1F5
LDP	15.1F5	15.1F5

Copyright © 2019, Juniper Networks, Inc.

Table 42: Protocols and Applications Supported by MPC8E and MPC9E on the MX2010 and MX2020 Routers (continued)

Protocol or Application	First Supported Junos OS Release	
	MPC8E	MPC9E
Layer 2 features:	Release	Release
• Trunk ports	• 15.1F5	• 15.1F5
• Layer 2 support for MX Series Virtual Chassis	• 17.3R1	• 17.3R1
• Layer 2 and Layer 2.5, IRB and spanning tree protocols (xSTP)	• 15.1F5	• 15.1F5
• IEEE 802.1ad provider bridges	• 15.1F5	• 15.1F5
• Layer 2 protocol tunneling (L2PT) support	• 15.1F5	• 15.1F5
• Layer 2 Tunneling Protocol (L2TP)	• 15.1F5	• 15.1F5
• Multichassis LAG—active/active and active/standby	• 15.1F5	• 15.1F5
• Multichassis LAG—active/active with IGMP snooping	• 15.1F5	• 15.1F5
• IGMP snooping with bridging, IRB, and VPLS	• 15.1F5	• 15.1F5
Layer 2 VPN interfaces support VLAN ID list	15.1F5	15.1F5
Link aggregation (IEEE 802.3ad)	15.1F5	15.1F5
Link Aggregation Control Protocol (LACP)	15.1F5	15.1F5
Link Layer Discovery Protocol (LLDP)	15.1F5	15.1F5
Local loopback	15.1F5	15.1F5
MAC learning, policing, accounting, and filtering	15.1F5	15.1F5
Mobile IP	-	-
Multichassis Link Aggregation	15.1F5	15.1F5
Multiple Tag Protocol Identifiers (TPIDs)	15.1F5	15.1F5

Copyright © 2019, Juniper Networks, Inc.

Table 42: Protocols and Applications Supported by MPC8E and MPC9E on the MX2010 and MX2020 Routers (continued)

Protocol or Application	First Supported Junos OS Release	
	MPC8E	MPC9E
MPLS: • Switching of pseudowire segments (multisegment pseudowires with BGP-L2VPN) • LDP signaling for VPLS (LDP-VPLS) and MAC flush message processing (MAC-FLUSH-TLV) • RSVP graceful restart interoperability with Cisco using Nodal Hello • Failure action on BFD session down of RSVP LSPs • OSPF and IS-IS loop-free alternates (LFA) • 4/5 label MPLS operation • Virtual circuit connectivity verification (VCCV) BFD • MPLS-FRR bypass link protection • Load sharing across 64 ECMP next hops • MPLS-FRR VPLS instance prioritization • Five label stack on ingress	15.1F5	15.1F5
MPLS node protection, link protection, and statistics for static LSPs	15.1F5	15.1F5
mvrp	-	-
Multitopology routing	15.1F5	15.1F5
Nonstop active routing (NSR)	15.1F5	15.1F5
OSPF	15.1F5	15.1F5
Packet mirroring	15.1F5	15.1F5
Precision Time Protocol (PTP) (IEEE 1588)	17.4R1	17.4R1
IEEE 802.1ah provider backbone bridging (PBB)	-	-
RSVP	15.1F5	15.1F5
RIP	15.1F5	15.1F5
SNMP	15.1F5	15.1F5

Copyright © 2019, Juniper Networks, Inc.

Table 42: Protocols and Applications Supported by MPC8E and MPC9E on the MX2010 and MX2020 Routers (continued)

Protocol or Application	First Supported Junos OS Release	
	MPC8E	MPC9E
Spanning tree protocols: • *IEEE 802.1s Multiple Spanning Tree Protocol (MSTP)* (part of IEEE 802.1Q VLANs) • *IEEE 802.1w Rapid Spanning Tree Protocol (RSTP)* • *IEEE 802.1D Spanning Tree Protocol (STP)* • Per-VLAN Spanning Tree (PVST) • Bridge protocol data units (BPDUs) guard and loop guard • STP inter-protocol action profiles and MAC flush (in VPLS multi-homing, flush all MACs when there is a change in the STP interface state due to root protect)	15.1F5	15.1F5
Subscriber management and services: • Enhanced subscriber management	16.1R4; 17.1R1	16.1R4; 17.1R1
Synchronous Ethernet	16.1R1	16.1R1
Two-Way Active Measurement Protocol (TWAMP) Real-time Performance Monitoring (RPM)/TWAMP hardware timestamping	17.3R1	17.3R1
Tunnel services • Clear DF-Bit (Don't Fragment Bit)	15.1F5	15.1F5
Unnumbered Ethernet Interface	15.1F5	15.1F5
VLANs IEEE 802.1Q: • VLAN stacking and rewriting • Channels defined by two stacked VLAN tags • Flexible VLAN tagging • IP service for nonstandard TPID and stacked VLAN tags	15.1F5	15.1F5
Virtual Chassis: MPLS IPv4 and IPv6, unicast, multicast forwarding, VPLS, NSR for Layer 3/MPLS services	17.3R1	17.3R1
Virtual private LAN service (VPLS): • BGP multihoming for inter-AS VPLS • Gigabit Ethernet as core-facing interface • Configurable label block sizes • Hashing L3/L4 fields under Ethernet pseudowire for VPLS encapsulation, CCC encapsulation, and MPLS encapsulation • VPLS flood forwarding table filter (FTF), input FTF • Broadcast, unicast unknown, and multicast (BUM) traffic hashing over LAG	15.1F5	15.1F5
Virtual private network (VPN)	15.1F5	15.1F5

Table 42: Protocols and Applications Supported by MPC8E and MPC9E on the MX2010 and MX2020 Routers (continued)

Protocol or Application	First Supported Junos OS Release	
	MPC8E	MPC9E
Virtual Router Redundancy Protocol (VRRP) for IPv4	15.1F5	15.1F5
VPLS packet flooding to the right set of interfaces across mesh groups	15.1F5	-
MACSec Capabilities: Starting in Junos OS Release 17.4R1, the JNP-MIC-100G MIC extends Media Access Control Security (MACsec) capabilities on MPC8E and MPC9E MPCs installed in MX2010, MX2020, and MX2008 routers. Only MPC8E/9E with JNP-MIC-100G MIC supports MACsec feature. • GCM-AES-128 MACSec Encryption, 802.1AE-2006 • GCM-AES-256 MACSec Encryption, 802.1AEbn-2011 • GCM-AES-XPN-128 Cipher Suite, 802.1AEbw-2013 • GCM-AES-XPN-256 Cipher Suite, 802.1AEbw-2013	17.4R1	17.4R1

Release History Table

Release	Description
17.4R1	Starting in Junos OS Release 17.4R1, the JNP-MIC-100G MIC extends Media Access Control Security (MACsec) capabilities on MPC8E and MPC9E MPCs installed in MX2010, MX2020, and MX2008 routers.

Related Documentation

- *MPC8E on MX Series Routers Overview*
- *MPC9E on MX Series Routers Overview*

Protocols and Applications Supported by the MS-MIC and MS-MPC

Table 43 on page 340 contains the first Junos OS Release support for protocols and applications on the MX104, MX240, MX480, MX960, MX2010, and MX2020 Multiservices MIC (MS-MIC) and Multiservices MPC (MS-MPC). A dash indicates that the protocol or application is not supported.

Table 43: Protocols and Applications Supported by the MS-MIC and MS-MPC

Software Feature	First Supported Junos OS Release
GRE Key	–
GRE dont-fragment	–
HTTP redirect services	15.1R4
Stateful firewall	13.2R4

Copyright © 2019, Juniper Networks, Inc.

Table 43: Protocols and Applications Supported by the MS-MIC and MS-MPC (continued)

Software Feature	First Supported Junos OS Release
Network Address Translation (NAT) for IP addresses	13.2R4
Port Address Translation (PAT) for port numbers	13.2R4
IP Security (IPSec) encryption	13.2R4
Flow aggregation	–
Active flow monitoring exports cflowd version 5 and version 8 records	–
Active flow monitoring exports flow monitoring version 9 records, based on RFC 3954	13.2R4
Graceful Routing Engine Switchover (GRES)	13.3 NOTE: GRES is not supported for MS-MIC on MX104 router.
Passive flow monitoring	–
Passive flow collection	–
Flow-tap	–
Dynamic flow capture	–
Real-time performance monitoring	13.3
Link Services	–
MX Series Virtual Chassis with stateful firewall	14.2
MX Series Virtual Chassis with IPv4-to-IPv4 basic NAT, dynamic NAT, static destination NAT, dynamic NAT with port mapping, and stateful NAT64	16.1R4 and 18.3R1. Starting in Junos OS Release 18.4R1, these features are supported on the MX Series Virtual Chassis for the Juniper broadband network gateway (BNG).
MX Series Virtual Chassis with DS-Lite	18.4R1
Traffic sampling	13.2R4
Tunnel services: • IP-IP unicast tunneling • GRE unicast tunneling—Supports GRE fragmentation • Protocol Independent Multicast (PIM) sparse mode unicast tunneling	–
Virtual tunnel interface for Layer 3 VPNs	–

Table 43: Protocols and Applications Supported by the MS-MIC and MS-MPC (continued)

Software Feature	First Supported Junos OS Release
Layer 2 Tunneling Protocol (L2TP)	–
Voice services: • Compressed Real-Time Transport Protocol (CRTP)	–
Encapsulations: • Multilink Frame Relay (MLFR) • Multilink Point-to-Point Protocol (MLPP)	–

Related Documentation

- MX Series MPC Overview on page 11
- MPCs Supported by MX Series Routers on page 12
- Multiservices MIC on page 205
- Multiservices MPC on page 86

Protocols and Applications Supported by the MX10003 MPC (Multi-Rate) on the MX10003 Router

Table 37 on page 296 lists the protocols and applications supported by MX10003 MPC (Multi-Rate) on the MX10003 router.

An en dash indicates that the protocol or application is not supported.

Table 44: Protocols and Applications Supported by MX10003MPC on the MX10003 Router

Protocol or Application	First Supported Junos OS Release
Access Node Control Protocol (ANCP)	-
Accepts traffic destined for generic routing encapsulation (GRE) tunnels or Distance Vector Multicast Routing Protocol (DVMRP) (IP-in-IP) tunnels • *Dynamic* • *Manual*	17.3R1
Bidirectional Forwarding Detection protocol (BFD)	17.3R1
Border Gateway Protocol (BGP)	17.3R1
Bridge protocol data units (BPDUs)	17.3R1
BGP/*MPLS* virtual private networks (VPNs)	17.3R1

Copyright © 2019, Juniper Networks, Inc.

Table 44: Protocols and Applications Supported by MX10003MPC on the MX10003 Router (continued)

Protocol or Application	First Supported Junos OS Release
Class of service (CoS): • Maintain CoS across internal tunnel interfaces • Packet rewrites • Behavior aggregate (BA) classification • BA classification based on 802.1p of payload for core-facing VPLS interfaces • BA DSCP classification of MPLS packets for L3VPN/VPLS LSI and MPLS interfaces • Rate-limit option for per-port queues • BA DSCP classification for VPLS/CCC family • Configurable .1p inheritance: push and swap from the hidden tag • Configurable shaping overhead for scheduling	17.3R1
Class of service (CoS) per port: • Eight queues per port • Excess-rate and excess-priority configurations at the queue level • Shaping at the port level • Shaping at the queue level • Scheduling of queues based on the weighted round-robin (WRR) per excess-priority class • Round-robin scheduling of the queues per priority class • Weighted random early detection (WRED)	17.3R1
Class of service (CoS) per virtual LAN (VLAN): • Accounting, filtering, and policing • IEEE 802.1p rewrite • Classification • Tricolor marking	17.3R1
Class of service (CoS) per Point-to-Point Protocol over Ethernet (PPPoE) or Dynamic Host Configuration Protocol (DHCP) subscriber interfaces: • Accounting, filtering, and policing • IEEE 802.1p rewrite • Classification • Excess-rate and excess-priority configuration at the queue level • Tricolor marking • Shaping at the queue level • Scheduling of queues based on weighted round-robin (WRR) per priority class • Weighted random early detection (WRED)	17.3R1
Damping	17.3R1
Distributed Denial-of-Service (DDoS) Protection	17.3R1
DVMRP and GRE support—access side and server side	17.3R1

Table 44: Protocols and Applications Supported by MX10003MPC on the MX10003 Router (continued)

Protocol or Application	First Supported Junos OS Release
Dynamic Power Management	17.3R1
Ethernet Ring Protection Switching with multiple G.8032 instances	17.3R1
Flexible Queuing Mode	17.3R1
IEEE 802.1ag Ethernet OAM Continuity Check protocol	17.3R1
IEEE 802.1ag Ethernet OAM Linktrace protocol	17.3R1
IEEE 802.1ag Ethernet OAM Loopback protocol	17.3R1
IEEE 802.1ag maintenance association intermediate point (MIP) support, continuity check message (CCM), stacked VLAN tagging, trunk ports, support for VPLS/VPWS, VLAN circuit cross-connect (CCC) encapsulation and translational cross-connect (TCC) encapsulation	17.3R1
IEEE 802.1ag optional type, length, and value (TLVs) support *Port Status TLV and Interface Status TLV*	17.3R1
IEEE 802.3ah distributed periodic packet management (PPM) process, alarm indication signal (AIS), and remote defect indication (RDI)	17.3R1
Firewall filters and policers: • Policer support for aggregated Ethernet • Aggregate firewall-based policer for all families of a logical interface • Intelligent hierarchical policers • Set forwarding class and loss priority for Routing Engine-generated packets by using a firewall • Physical interface policers, applying policers to the entire port • Lower policer limit from 32,000 to 8000 • Egress .1p MF and BA classification for VPLS • Differentiated Services Code Point (DSCP) rewrite for IPv4 and IPv6	17.3R1
Flexible Ethernet encapsulation	17.3R1
Graceful Routing Engine Switchover (GRES)	17.3R1
IGMPv3 support with snooping disabled	17.3R1
Ingress and egress hierarchical class-of-service (CoS) shaping and *hierarchical-scheduler*: • Set of Interfaces • VLAN level • Port level	17.3R1
Inline flow monitoring	17.3R1

Copyright © 2019, Juniper Networks, Inc.

Table 44: Protocols and Applications Supported by MX10003MPC on the MX10003 Router (continued)

Protocol or Application	First Supported Junos OS Release
Intelligent Oversubscription	17.3R1
Integrated routing and bridging (IRB)	17.3R1
Interoperability with existing MPCs	17.3R1
IPv4	17.3R1
IPv4 multicast	17.3R1
IPv6	17.3R1
IPv6 MLD	17.3R1
IPv6 multicast	17.3R1
IPv6 Neighbor Discovery	17.3R1
IS-IS	17.3R1
ITU-T Y.1731 timestamping support on MX Series routers	-
Flow monitoring and services: • Active monitoring (cflowed version 9 templates) • Port mirroring family VPLS, bridge CCC encapsulation (VPWS) • Packet slice for port mirroring • Flow monitoring on MS-DPCs • Inline flow monitoring	Release • 17.3R1 • 17.3R1 • 17.3R1 • - • 17.3R1
Labeled-switched-paths (LSPs) including accounting, policers, and filtering	17.3R1
LDP	17.3R1
Layer 2 features: • Trunk ports • Layer 2 support for MX Series Virtual Chassis • Layer 2 and Layer 2.5, IRB and spanning tree protocols (xSTP) • IEEE 802.1ad provider bridges • Layer 2 protocol tunneling (L2PT) support • Layer 2 Tunneling Protocol (L2TP) • Multichassis LAG—active/active and active/standby • Multichassis LAG—active/active with IGMP snooping • IGMP snooping with bridging, IRB, and VPLS	Release • 17.3R1 • - • 17.3R1 • 17.3R1 • 17.3R1 • 17.3R1 • 17.3R1 • 17.3R1 • 17.3R1

Table 44: Protocols and Applications Supported by MX10003MPC on the MX10003 Router (continued)

Protocol or Application	First Supported Junos OS Release
Layer 2 VPN interfaces support VLAN ID list	17.3R1
Link aggregation (IEEE 802.3ad)	17.3R1
Link Aggregation Control Protocol (LACP)	17.3R1
Link Layer Discovery Protocol (LLDP)	17.3R1
Local loopback	17.3R1
MAC learning, policing, accounting, and filtering	17.3R1
MACSec with GCM-AES-256 Encryption and GCM-AES-XPN-256 Encryption NOTE: MACSec is supported on JNP-MIC1-MACSEC only.	17.3R2
Mobile IP	-
Multichassis Link Aggregation	17.3R1
Multiple Tag Protocol Identifiers (TPIDs)	17.3R1
MPLS: • Switching of pseudowire segments (multisegment pseudowires with BGP-L2VPN) • LDP signaling for VPLS (LDP-VPLS) and MAC flush message processing (MAC-FLUSH-TLV) • RSVP graceful restart interoperability with Cisco using Nodal Hello • Failure action on BFD session down of RSVP LSPs • OSPF and IS-IS loop-free alternates (LFA) • 4/5 label MPLS operation • Virtual circuit connectivity verification (VCCV) BFD • MPLS-FRR bypass link protection • Load sharing across 64 ECMP next hops • MPLS-FRR VPLS instance prioritization • Five label stack on ingress	17.3R1
MPLS node protection, link protection, and statistics for static LSPs	17.3R1
mvrp	-
Multitopology routing	17.3R1
Nonstop active routing (NSR)	17.3R1
OSPF	17.3R1

Copyright © 2019, Juniper Networks, Inc.

Table 44: Protocols and Applications Supported by MX10003MPC on the MX10003 Router (continued)

Protocol or Application	First Supported Junos OS Release
Packet mirroring	17.3R1
Precision Time Protocol (PTP) (IEEE 1588)	17.3R1
IEEE 802.1ah provider backbone bridging (PBB)	-
RSVP	17.3R1
RIP	17.3R1
SNMP	17.3R1
Spanning tree protocols: • *IEEE 802.1s Multiple Spanning Tree Protocol (MSTP)* (part of IEEE 802.1Q VLANs) • *IEEE 802.1w Rapid Spanning Tree Protocol (RSTP)* • *IEEE 802.1D Spanning Tree Protocol (STP)* • Per-VLAN Spanning Tree (PVST) • Bridge protocol data units (BPDUs) guard and loop guard • STP inter-protocol action profiles and MAC flush (in VPLS multi-homing, flush all MACs when there is a change in the STP interface state due to root protect)	17.3R1
Subscriber management and services: • Enhanced subscriber management	17.3R1
Synchronous Ethernet	17.3R1
Two-Way Active Measurement Protocol (TWAMP)	-
Tunnel services • Clear DF-Bit (Don't Fragment Bit)	17.3R1
Unnumbered Ethernet Interface	17.3R1
VLANs IEEE 802.1Q: • VLAN stacking and rewriting • Channels defined by two stacked VLAN tags • Flexible VLAN tagging • IP service for nonstandard TPID and stacked VLAN tags	17.3R1
Virtual Chassis: MPLS IPv4 and IPv6, unicast, multicast forwarding, VPLS, NSR for Layer 3/MPLS services	--

Table 44: Protocols and Applications Supported by MX10003MPC on the MX10003 Router (continued)

Protocol or Application	First Supported Junos OS Release
Virtual private LAN service (VPLS): • BGP multihoming for inter-AS VPLS • Gigabit Ethernet as core-facing interface • Configurable label block sizes • Hashing L3/L4 fields under Ethernet pseudowire for VPLS encapsulation, CCC encapsulation, and MPLS encapsulation • VPLS flood forwarding table filter (FTF), input FTF • Broadcast, unicast unknown, and multicast (BUM) traffic hashing over LAG	17.3R1
Virtual private network (VPN)	17.3R1
Virtual Router Redundancy Protocol (VRRP) for IPv4	17.3R1
VPLS packet flooding to the right set of interfaces across mesh groups	-

Protocols and Applications Supported by the JNP10K-LC2101 on the MX10008 Routers

Table 45 on page 348 lists the protocols and applications supported by JNP10K-LC2101 on the MX10008 routers.

An en dash indicates that the protocol or application is not supported.

Table 45: Protocols and Applications Supported by JNP10K-LC2101 on the MX10008 Routers

Protocol or Application	JNP10K-LC2101
Access Node Control Protocol (ANCP)	-
Accepts traffic destined for generic routing encapsulation (GRE) tunnels or Distance Vector Multicast Routing Protocol (DVMRP) (IP-in-IP) tunnels • *Dynamic* • *Manual*	18.2R1
Bidirectional Forwarding Detection protocol (BFD)	18.2R1
Border Gateway Protocol (BGP)	18.2R1
Bridge protocol data units (BPDUs)	18.2R1
BGP/*MPLS* virtual private networks (VPNs)	18.2R1

Copyright © 2019, Juniper Networks, Inc.

Table 45: Protocols and Applications Supported by JNP10K-LC2101 on the MX10008 Routers (continued)

Protocol or Application	JNP10K-LC2101
Chassis: • Fabric Management • Redundancy Mode • Fabric Grant Bypass Mode • Hypermode • License Mode (IR, R, Base) • Port Identification • Rate Selectability • Lane LED • Smooth Upgrade	**Release** • 18.2R1 • 18.2R1 • - • 18.2R1 • - • 18.2R1 • 18.2R1 • 18.2R1 • NA
Class of service (CoS): • Maintain CoS across internal tunnel interfaces • Packet rewrites • Behavior aggregate (BA) classification • BA classification based on 802.1p of payload for core-facing VPLS interfaces • BA DSCP classification of MPLS packets for L3VPN/VPLS LSI and MPLS interfaces • Rate-limit option for per-port queues • BA DSCP classification for VPLS/CCC family • Configurable .1p inheritance: push and swap from the hidden tag • Configurable shaping overhead for scheduling • Dedicated CoS Queues • Per Unit Queuing • Hierarchical Queuing • Per Priority Shaping and support for **enhanced-priority-mode** • Logical Interface Scheduling (DLCIs and VLANs)	18.2R1
Class of service (CoS) per port: • Eight queues per port • Excess-rate and excess-priority configurations at the queue level • Shaping at the port level • Shaping at the queue level • Scheduling of queues based on the weighted round-robin (WRR) per excess-priority class • Round-robin scheduling of the queues per priority class • Weighted random early detection (WRED)	18.2R1

Table 45: Protocols and Applications Supported by JNP10K-LC2101 on the MX10008 Routers (continued)

Protocol or Application	JNP10K-LC2101
Class of service (CoS) per virtual LAN (VLAN): • Accounting, filtering, and policing • IEEE 802.1p rewrite • Classification • Tricolor marking • Cos Scaling on Non Queuing MPCs (per VLAN queuing)	18.2R1
Class of service (CoS) per Point-to-Point Protocol over Ethernet (PPPoE) or Dynamic Host Configuration Protocol (DHCP) subscriber interfaces: • Accounting, filtering, and policing • IEEE 802.1p rewrite • Classification • Excess-rate and excess-priority configuration at the queue level • Tricolor marking • Shaping at the queue level • Scheduling of queues based on weighted round-robin (WRR) per priority class • Weighted random early detection (WRED)	-
Damping	18.2R1
Distributed Denial-of-Service (DDoS) Protection	18.2R1
DVMRP and GRE support—access side and server side	18.2R1
Dynamic Power Management	18.2R1
Ethernet Ring Protection Switching with multiple G.8032 instances	18.2R1
Flexible Queuing Mode	18.2R1
IEEE 802.1ag Ethernet OAM Continuity Check protocol	18.2R1
IEEE 802.1ag Ethernet OAM Linktrace protocol	18.2R1
IEEE 802.1ag Ethernet OAM Loopback protocol	18.2R1
IEEE 802.1ag maintenance association intermediate point (MIP) support, continuity check message (CCM), stacked VLAN tagging, trunk ports, support for VPLS/VPWS, VLAN circuit cross-connect (CCC) encapsulation and translational cross-connect (TCC) encapsulation	18.2R1

Copyright © 2019, Juniper Networks, Inc.

Table 45: Protocols and Applications Supported by JNP10K-LC2101 on the MX10008 Routers (continued)

Protocol or Application	JNP10K-LC2101
IEEE 802.1ag optional type, length, and value (TLVs) support *Port Status TLV and Interface Status TLV*	18.2R1
IEEE 802.3ah distributed periodic packet management (PPM) process, alarm indication signal (AIS), and remote defect indication (RDI)	18.2R1
Firewall filters and policers: • Policer support for aggregated Ethernet • Aggregate firewall-based policer for all families of a logical interface • Intelligent hierarchical policers • Set forwarding class and loss priority for Routing Engine-generated packets by using a firewall • Physical interface policers, applying policers to the entire port • Lower policer limit from 32,000 to 8000 • Egress .1p MF and BA classification for VPLS • Differentiated Services Code Point (DSCP) rewrite for IPv4 and IPv6 • Filter-based GRE Tunneling across IPv4 Networks • Filter-based L2TP Tunneling across IPv4 Networks	18.2R1
Flexible Ethernet encapsulation	18.2R1
Graceful Routing Engine Switchover (GRES)	18.2R1
IGMPv3 support with snooping disabled	18.2R1
Ingress and egress hierarchical class-of-service (CoS) shaping and *hierarchical-scheduler*: • Set of Interfaces • VLAN level • Port level	18.2R1
Inline flow monitoring • 256K Flow entries for VPLS (IPv4 and IPv6) • 256K Flow entries for MPLS (IPv4 and IPv6)	18.2R1
Inline Video Monitoring	-
Inline 6rd and 6to4	-
Intelligent Oversubscription	18.2R1

Table 45: Protocols and Applications Supported by JNP10K-LC2101 on the MX10008 Routers (continued)

Protocol or Application	JNP10K-LC2101
Integrated routing and bridging (IRB)	18.2R1
Unified *In-service software upgrade (Unified ISSU)*	-
Interoperability • Interoperability with existing MPCs • Interoperability with 100-Gigabit Ethernet Interfaces	-
IPv4	18.2R1
IPv4 multicast	18.2R1
IPv6	18.2R1
IPv6 MLD	18.2R1
IPv6 multicast	18.2R1
IPv6 Neighbor Discovery	18.2R1
IS-IS	18.2R1
ITU-T Y.1731 timestamping support on MX Series routers	18.2R1
Flow monitoring and services: • Active monitoring (cflowed version 9 templates) • Port mirroring family VPLS, bridge CCC encapsulation (VPWS) • Packet slice for port mirroring	**Release** • 18.2R1 • 18.2R1 • 18.2R1
Junos Continuity Supported HW	NA
Labeled-switched-paths (LSPs) including accounting, policers, and filtering	18.2R1
LDP	18.2R1

Copyright © 2019, Juniper Networks, Inc.

Table 45: Protocols and Applications Supported by JNP10K-LC2101 on the MX10008 Routers (continued)

Protocol or Application	JNP10K-LC2101
Layer 2 features: • Trunk ports • Layer 2 support for MX Series Virtual Chassis • Layer 2 and Layer 2.5, IRB and spanning tree protocols (xSTP) • IEEE 802.1ad provider bridges • Layer 2 protocol tunneling (L2PT) support • Layer 2 Tunneling Protocol (L2TP) • Multichassis LAG—active/active and active/standby • Multichassis LAG—active/active with IGMP snooping • IGMP snooping with bridging, IRB, and VPLS	Release • 18.2R1 • - • 18.2R1 • 18.2R1 • 18.2R1 • 18.2R1 • 18.2R1 • 18.2R1 • 18.2R1
Layer 2 VPN interfaces support VLAN ID list	18.2R1
Link aggregation (IEEE 802.3ad)	18.2R1
Link Aggregation Control Protocol (LACP)	18.2R1
Link Layer Discovery Protocol (LLDP)	18.2R1
Local loopback	18.2R1
MAC learning, policing, accounting, and filtering	18.2R1
Mobile IP	-
Multichassis Link Aggregation	18.2R1
Multiple Tag Protocol Identifiers (TPIDs)	18.2R1

Table 45: Protocols and Applications Supported by JNP10K-LC2101 on the MX10008 Routers (continued)

Protocol or Application	JNP10K-LC2101
MPLS: • Switching of pseudowire segments (multisegment pseudowires with BGP-L2VPN) • LDP signaling for VPLS (LDP-VPLS) and MAC flush message processing (MAC-FLUSH-TLV) • RSVP graceful restart interoperability with Cisco using Nodal Hello • Failure action on BFD session down of RSVP LSPs • OSPF and IS-IS loop-free alternates (LFA) • 4/5 label MPLS operation • Virtual circuit connectivity verification (VCCV) BFD • MPLS-FRR bypass link protection • Load sharing across 64 ECMP next hops • MPLS-FRR VPLS instance prioritization • Five label stack on ingress	18.2R1
MPLS node protection, link protection, and statistics for static LSPs	18.2R1
mvrp	-
Multitopology routing	18.2R1
Nonstop active routing (NSR)	18.2R1
Network Edge Security (802.1x)	-
OSPF	18.2R1
Optical Transport Network • Link Degrade Monitoring • FEC Modes • Bit Error Rate (BER)	-
Packet mirroring	18.2R1
Precision Time Protocol (PTP) (IEEE 1588)	-
IEEE 802.1ah provider backbone bridging (PBB)	-
RSVP	18.2R1
RIP	18.2R1
RFC2544 Benchmarking Tests	-

Copyright © 2019, Juniper Networks, Inc.

Table 45: Protocols and Applications Supported by JNP10K-LC2101 on the MX10008 Routers (continued)

Protocol or Application	JNP10K-LC2101
SNMP	18.2R1
Spanning tree protocols: • *IEEE 802.1s Multiple Spanning Tree Protocol (MSTP)* (part of IEEE 802.1Q VLANs) • *IEEE 802.1w Rapid Spanning Tree Protocol (RSTP)* • *IEEE 802.1D Spanning Tree Protocol (STP)* • Per-VLAN Spanning Tree (PVST) • Bridge protocol data units (BPDUs) guard and loop guard • STP inter-protocol action profiles and MAC flush (in VPLS multi-homing, flush all MACs when there is a change in the STP interface state due to root protect)	18.2R1
Stateful Load Balancing for Aggregated Ethernet Interfaces	-
Subscriber management and services: • Enhanced subscriber management	-
Synchronous Ethernet • Hybrid Mode • Line Card Redundancy	-
Two-Way Active Measurement Protocol (TWAMP)	-
Tunnel services • Clear DF-Bit (Don't Fragment Bit)	18.2R1
Unnumbered Ethernet Interface	18.2R1
VLANs IEEE 802.1Q: • VLAN stacking and rewriting • Channels defined by two stacked VLAN tags • Flexible VLAN tagging • IP service for nonstandard TPID and stacked VLAN tags	18.2R1
Virtual Chassis: MPLS IPv4 and IPv6, unicast, multicast forwarding, VPLS, NSR for Layer 3/MPLS services	-

Table 45: Protocols and Applications Supported by JNP10K-LC2101 on the MX10008 Routers (continued)

Protocol or Application	JNP10K-LC2101
Virtual private LAN service (VPLS): • BGP multihoming for inter-AS VPLS • Gigabit Ethernet as core-facing interface • Configurable label block sizes • Hashing L3/L4 fields under Ethernet pseudowire for VPLS encapsulation, CCC encapsulation, and MPLS encapsulation • VPLS flood forwarding table filter (FTF), input FTF • Broadcast, unicast unknown, and multicast (BUM) traffic hashing over LAG	18.2R1
Virtual private network (VPN)	18.2R1
Virtual Router Redundancy Protocol (VRRP) for IPv4	18.2R1
VPLS packet flooding to the right set of interfaces across mesh groups	-
MACSec Capabilities: • GCM-AES-128 MACSec Encryption, 802.1AE-2006 • GCM-AES-256 MACSec Encryption, 802.1AEbn-2011 • GCM-AES-XPN-128 Cipher Suite, 802.1AEbw-2013 • GCM-AES-XPN-256 Cipher Suite, 802.1AEbw-2013	-

Related Documentation

- *JNP10K-LC2101 MPC on MX10008 Routers Overview*
- Line card (MX10K-LC2101) on page 140

Protocols and Applications Supported by the MPC10E

Table 46 on page 356 contains protocols and applications supported by the MPC10E line cards (MPC10E-15C-MRATE and MPC10E-10C-MRATE) on the MX240, MX480, and MX960 routers.

A dash indicates that the protocol or application is not supported.

Table 46: Protocols and Applications Supported by MPC10E line cards in the MX240, MX480, and MX960 Routers

Protocol or Application	First Supported Junos OS Release for MPC10E-15C-MRATE	First Supported Junos OS Release for MPC10E-10C-MRATE
Access Node Control Protocol (ANCP)	-	-

Copyright © 2019, Juniper Networks, Inc.

Table 46: Protocols and Applications Supported by MPC10E line cards in the MX240, MX480, and MX960 Routers (continued)

Protocol or Application	First Supported Junos OS Release for MPC10E-15C-MRATE	First Supported Junos OS Release for MPC10E-10C-MRATE
Accepts traffic destined for generic routing encapsulation (GRE) tunnels • *Dynamic* • *Standard*	Release • - • 19.1R1	Release • - • 19.2R1
Accepts traffic destined for Distance Vector Multicast Routing Protocol (DVMRP) (IP-in-IP) tunnels • *Dynamic* • *Standard*	-	-
Bidirectional Forwarding Detection protocol (BFD)	-	-
Centralized Bidirectional Forwarding Detection protocol (BFD)	19.1R1	19.2R1
Internet Control Message Protocol (ICMP) and ICMPv6	19.1R1	19.2R1
Border Gateway Protocol (BGP)	19.1R1	19.2R1
Bridge protocol data units (BPDUs)	-	-
BGP/*MPLS* virtual private networks (VPNs)	19.1R1	19.2R1
Routing Instance: • Logical system • Virtual routing and forwarding (VRF)	19.1R1	19.2R1
Load Balancing	19.1R1	19.2R1

Class of service (CoS)	First Supported Junos OS Release for MPC10E-15C-MRATE	First Supported Junos OS Release for MPC10E-10C-MRATE
Maintain CoS across internal tunnel interfaces	19.1R1	19.2R1
Packet Rewrites on DSCP, Inet Precedence (both Ipv4 and IPv6) and EXP bits	19.1R1	19.2R1
Behavior aggregate (BA) classification (except IEEE classifiers)	19.1R1	19.2R1
BA classification based on 802.1p of payload for core-facing VPLS interfaces	-	-
BA DSCP classification of MPLS packets for L3VPN and MPLS interfaces	19.1R1	19.2R1

Copyright © 2019, Juniper Networks, Inc.

Table 46: Protocols and Applications Supported by MPC10E line cards in the MX240, MX480, and MX960 Routers (continued)

Class of service (CoS)	First Supported Junos OS Release for MPC10E-15C-MRATE	First Supported Junos OS Release for MPC10E-10C-MRATE
BA DSCP classification of MPLS packets for VPLS LSI interfaces	-	-
Rate limit option for per-port queues	19.1R1	19.2R1
BA DSCP classification for VPLS/CCC family	-	-
Configurable .1p inheritance: push and swap from the hidden tag	-	-
Configurable shaping overhead for scheduling	19.1R1	19.2R1
Class of service (CoS) per port: • Eight queues per port • Excess-rate and excess-priority configurations at the queue level • Shaping at the port level • Shaping at the queue level • Scheduling of queues based on the weighted round-robin (WRR) per excess-priority class • Round-robin scheduling of the queues per priority class • Weighted random early detection (WRED)	19.1R1	19.2R1
Class of service (CoS) per virtual LAN (VLAN): • Accounting, filtering, and policing • IEEE 802.1p rewrite • IEEE 802.1p classification	Release • 19.1R1 • - • -	Release • 19.2R1 • - • -
Class of service (CoS) per Point-to-Point Protocol over Ethernet (PPPoE) or Dynamic Host Configuration Protocol (DHCP) subscriber interfaces: • Accounting, filtering, and policing • IEEE 802.1p rewrite • Classification • Excess-rate and excess-priority configuration at the queue level • Shaping at the queue level • Scheduling of queues based on weighted round-robin (WRR) per priority class • Weighted random early detection (WRED)	-	-

Copyright © 2019, Juniper Networks, Inc.

Table 46: Protocols and Applications Supported by MPC10E line cards in the MX240, MX480, and MX960 Routers (continued)

Class of service (CoS)	First Supported Junos OS Release for MPC10E-15C-MRATE	First Supported Junos OS Release for MPC10E-10C-MRATE
Ingress and egress hierarchical class-of-service (CoS) shaping and *hierarchical-scheduler*: NOTE: Only egress is supported. • Group of virtual LANs (VLANs) level • VLAN level • Port level	-	-
Distributed Denial-of-Service (DDoS) Protection	19.1R1	19.2R1
DVMRP and GRE support—access side and server side	-	-
Managing Power	19.1R1	19.2R1
Ethernet Ring Protection Switching with multiple G.8032 instances	-	-
Flexible Queuing Mode	-	-
IEEE 802.1ag Ethernet OAM Continuity Check protocol	-	-
IEEE 802.1ag Ethernet OAM Linktrace protocol	-	-
IEEE 802.1ag Ethernet OAM Loopback protocol	-	-
IEEE 802.1ag:	Release	Release
• Maintenance association intermediate point (MIP)	• -	• -
• Continuity check message (CCM)	• -	• -
• Stacked VLAN tagging	• 19.1R1	• 19.2R1
• Trunk ports	• -	• -
• VPLS	• -	• -
• VPWS	• 19.1R1	• 19.2R1
• VLAN circuit cross-connect (CCC) encapsulation and	• 19.1R1	• 19.2R1
• Translational cross-connect (TCC) encapsulation	• -	• -
IEEE 802.1ag optional type, length, and value (TLVs) support *Port Status TLV and Interface Status TLV*	19.1R1	19.2R1
IEEE 802.3ah distributed periodic packet management (PPM) process, alarm indication signal (AIS), and remote defect indication (RDI)	19.1R1	19.2R1

Table 46: Protocols and Applications Supported by MPC10E line cards in the MX240, MX480, and MX960 Routers (continued)

Layer 2 Features	First Supported Junos OS Release for MPC10E-15C-MRATE	First Supported Junos OS Release for MPC10E-10C-MRATE
Trunk ports	-	-
Layer 2 support for MX Series Virtual Chassis	-	-
Layer 2 and Layer 2.5, IRB and Spanning Tree Protocols (xSTP)	-	-
IEEE 802.1ad provider bridges	-	-
Layer 2 Tunneling Protocol (L2TP)	-	-
Multichassis LAG—active/active and active/standby	-	-
Multichassis LAG—active/active with IGMP snooping	-	-
Link aggregation group (LAG)—VLAN-CCC encapsulation	-	-
IGMP snooping with bridging, IRB, and VPLS	-	-
Layer 2 VPN interfaces support VLAN ID list	-	-
Link aggregation (IEEE 802.3ad)	-	-
Link Aggregation Control Protocol (LACP)	-	-
Link Layer Discovery Protocol (LLDP)	-	-
Local loopback	-	-
MAC learning, policing, accounting, and filtering	-	-
Firewall filters and policers	First Supported Junos OS Release for MPC10E-15C-MRATE	First Supported Junos OS Release for MPC10E-10C-MRATE
Family Inet/Inet6/MPLS	19.1R1	19.2R1
All the static match conditions/actions	19.1R1	19.2R1
Dynamic actions (port-mirroring, next hop, routing instance)	19.1R1	19.2R1
Interface-specific filters	19.1R1	19.2R1
BGP Flow specification.	19.1R1	19.2R1
Two color and three color policers (SRTCM and TRTCM)	19.1R1	19.2R1

Copyright © 2019, Juniper Networks, Inc.

Table 46: Protocols and Applications Supported by MPC10E line cards in the MX240, MX480, and MX960 Routers (continued)

Firewall filters and policers	First Supported Junos OS Release for MPC10E-15C-MRATE	First Supported Junos OS Release for MPC10E-10C-MRATE
FTF (filter attachment on routing table)	19.1R1	19.2R1
Firewall attachment on Aggregated Ethernet Interfaces (AE)	19.1R1	19.2R1
Hierarchical Policers	-	-
Family Any/CCC (for firewall)	19.2R1	19.2R1
Percentage Bandwidth policers, Shared Bandwidth policers, Logical Interface policers	-	-
Physical interface policers	-	-
Firewall Based GRE ENCAP/DECAP	19.2R1	19.2R1
Fast lookup filter	19.2R1	19.2R1
Jvision (firewall filter counters only)	19.2R1	19.2R1
Flexible Ethernet encapsulation	19.1R1	19.2R1
Graceful Routing Engine Switchover (GRES)	19.1R1	19.2R1
IGMPv3 support with snooping disabled	19.1R1	19.2R1
Intelligent Oversubscription on MIC and MPC Interfaces Overview	19.1R1	19.2R1
Integrated routing and bridging (IRB)	-	-
Unified *In-service software upgrade (Unified ISSU)*	-	-
Interoperability with MPCs	19.1R1	19.2R1
Interoperability with MS-DPCs/MS-MPCs	-	-
Interoperability with MX Series Flexible PIC Concentrators (MX-FPC)	-	-
IPv4	19.1R1	19.2R1
IPv4 multicast NOTE: Only PIM sparse mode (PIM-SM) and PIM source-specific multicast (PIM-SSM) are supported.	19.1R1	19.2R1
IPv6	19.1R1	19.2R1

Table 46: Protocols and Applications Supported by MPC10E line cards in the MX240, MX480, and MX960 Routers (continued)

Firewall filters and policers	First Supported Junos OS Release for MPC10E-15C-MRATE	First Supported Junos OS Release for MPC10E-10C-MRATE
IPv6 MLD	19.1R1	19.2R1
IPv6 multicast NOTE: Only PIM sparse mode (PIM-SM) and PIM source-specific multicast (PIM-SSM) are supported.	19.1R1	19.2R1
IPv6 Neighbor Discovery	19.1R1	19.2R1
IS-IS	19.1R1	19.2R1
ITU-T Y.1731 timestamping support on MX Series routers	-	-

MPLS	First Supported Junos OS Release for MPC10E-15C-MRATE	First Supported Junos OS Release for MPC10E-10C-MRATE
Switching of pseudowire segments (multisegment pseudowires with BGP-L2VPN)	19.1R1	19.2R1
LDP signaling for VPLS (LDP-VPLS) and MAC flush message processing (MAC-FLUSH-TLV)	-	-
RSVP graceful restart interoperability with Cisco using Nodal Hello	-	-
Failure action on BFD session down of RSVP LSPs	-	-
OSPF and IS-IS loop-free alternates (LFA)	19.1R1	19.2R1
4/5 label MPLS operation	19.1R1	19.2R1
Virtual circuit connectivity verification (VCCV) BFD	-	-
Point to multipoint using the enhanced-ip command (support for NG-MVPN and P2MP load balancing over aggregated Ethernet)	-	-
MPLS-FRR bypass link protection	19.1R1	19.2R1
Load sharing across 64 ECMP next hops	19.1R1	19.2R1
MPLS-FRR VPLS instance prioritization	-	-
Five label stack on ingress	19.1R1	19.2R1
MPLS node protection, link protection, and statistics for static LSPs	19.1R1	19.2R1

Copyright © 2019, Juniper Networks, Inc.

Table 46: Protocols and Applications Supported by MPC10E line cards in the MX240, MX480, and MX960 Routers (continued)

MPLS	First Supported Junos OS Release for MPC10E-15C-MRATE	First Supported Junos OS Release for MPC10E-10C-MRATE
mvrp	-	-
Multitopology routing	-	-
Nonstop active routing (NSR)	19.1R1	19.1R1
OSPF	19.1R1	19.1R1
Packet mirroring	19.1R1	19.2R1
Precision Time Protocol (PTP) (IEEE 1588)	19.1R1	19.2R1
IEEE 802.1ah provider backbone bridging (PBB)	-	-
Push a tag on Ethernet VPLS and Ethernet CCC tag encapsulations	-	-
RSVP	19.1R1	19.2R1
RIP	19.1R1	19.2R1
SNMP	19.1R1	19.2R1
Spanning Tree Protocols: • *IEEE 802.1s Multiple Spanning Tree Protocol (MSTP)* (part of IEEE 802.1Q VLANs) • *IEEE 802.1w Rapid Spanning Tree Protocol (RSTP)* • *IEEE 802.1D Spanning Tree Protocol (STP)* • Per-VLAN Spanning Tree (PVST) • Bridge protocol data units (BPDUs) guard and loop guard • STP inter-protocol action profiles and MAC flush (in VPLS multi-homing, flush all MACs when there is a change in the STP interface state due to root protect)	-	-
Subscriber Management Overview: • Enhanced subscriber management	-	-
Synchronous Ethernet	19.2R1	19.2R1
Two-Way Active Measurement Protocol (TWAMP)	19.2R1	19.2R1
Tunnel services • Clear DF-Bit (Don't Fragment Bit)	-	-

Table 46: Protocols and Applications Supported by MPC10E line cards in the MX240, MX480, and MX960 Routers (continued)

MPLS	First Supported Junos OS Release for MPC10E-15C-MRATE	First Supported Junos OS Release for MPC10E-10C-MRATE
Unified in-service software upgrade (ISSU)	-	-
Unnumbered Ethernet Interface	19.1R1	19.2R1
VLANs IEEE 802.1Q: • VLAN stacking and rewriting • Flexible VLAN tagging • Single VLAN tags • Dual VLAN tags • IP service for nonstandard TPID and stacked VLAN tags	19.1R1	19.2R1
Virtual Chassis: MPLS IPv4 and IPv6, unicast, multicast forwarding, VPLS, NSR for Layer 3/MPLS services	-	-
Virtual private LAN service (VPLS): • BGP multihoming for inter-AS VPLS • Gigabit Ethernet as core-facing interface • Configurable label block sizes • Hashing L3/L4 fields under Ethernet pseudowire for VPLS encapsulation, CCC encapsulation, and MPLS encapsulation • VPLS flood forwarding table filter (FTF), input FTF • Broadcast, unicast unknown, and multicast (BUM) traffic hashing over LAG	-	-
Virtual private network (VPN)	19.1R1	19.2R1
Virtual Router Redundancy Protocol (VRRP) for IPv4	19.1R1	19.2R1
VPLS packet flooding to the right set of interfaces across mesh groups	-	-
WAN-PHY mode	19.1R1	19.2R1

Flow monitoring and services	First Supported Junos OS Release for MPC10E-15C-MRATE	First Supported Junos OS Release for MPC10E-10C-MRATE
Inline IP Flow Information Export (IPFIX)	19.1R1	19.2R1
Port mirroring family VPLS, bridge CCC encapsulation (VPWS)	-	-
Packet slice for port mirroring	-	-

Copyright © 2019, Juniper Networks, Inc.

Table 46: Protocols and Applications Supported by MPC10E line cards in the MX240, MX480, and MX960 Routers (continued)

Flow monitoring and services	First Supported Junos OS Release for MPC10E-15C-MRATE	First Supported Junos OS Release for MPC10E-10C-MRATE
Labeled-switched-paths (LSPs) including accounting, policers, and filtering	19.1R1	19.2R1
LDP	19.1R1	19.2R1

MACSec	First Supported Junos OS Release for MPC10E-15C-MRATE	First Supported Junos OS Release for MPC10E-10C-MRATE
GCM-AES-128 MACSec Encryption, 802.1AE-2006	19.1R1	19.2R1
GCM-AES-256 MACSec Encryption, 802.1AEbn-2011	19.1R1	19.2R1
Mobile IP	-	-
Multichassis link aggregation	-	-
Multiple Tag Protocol Identifiers (TPIDs)	19.1R1	19.2R1

Related Documentation

- *MPC10E-15C-MRATE Overview*

Copyright © 2019, Juniper Networks, Inc.